Workshop Manual

Polo 1995 ➤

Heating, air conditioning

Edition 06.2004

Protected by copyright. Copying for private or commercial purposes, in part or in whole, is not permitted unless authorised by Volkswagen AG. Volkswagen AG does not guarantee or accept any liability with respect to the correctness of information in this document. Copyright by Volkswagen AG.

satelettronica

List of Workshop Manual Repair Groups

Repair Group

01 - Self-diagnosis

80 - Heating

87 - Air conditioning system

Protected by copyright. Copying for private or commercial purposes, in part or in whole, is not permitted unless authorised by Volkswagen AG. Volkswagen AG does not guarantee or accept any liability with respect to the correctness of information in this document. Copyright by Volkswagen AG.

satelettronica

Technical information should always be available to the foremen and mechanics, because their careful and constant adherence to the instructions is essential to ensure vehicle road-worthiness and safety. In addition, the normal basic safety precautions for working on motor vehicles must, as a matter of course, be observed.

All rights reserved.
No reproduction without prior agreement from publisher.

Copyright © 2015 Volkswagen AG, Wolfsburg

00050205120

Contents

01 - Self-diagnosis . . . 1

1 **Self-diagnosis of Climatronic, vehicles 10.99 ▸** . . . 1
1.1 Connecting vehicle diagnosis, testing and information system VAS 5051A or vehicle diagnosis and service information system VAS 5052 . . . 1
1.2 Function . . . 2
1.3 Technical data of self-diagnosis . . . 3
1.4 Test prerequisites: . . . 3
1.5 Diagnosis functions with vehicle diagnosis, testing and information system VAS 5051A or vehicle diagnosis and service information system VAS 5052 . . . 3
1.6 Fault table . . . 10
1.7 Overview of selectable display group numbers in measured value block 08 . . . 17

80 - Heating . . . 22

1 **Repairing heater, vehicles ▸ 09.99** . . . 22
1.1 Passenger compartment heating . . . 22
1.2 Removing and installing fresh air blower series resistor with overheating fuse N24 . . . 24
1.3 Removing fresh air blower V2 . . . 24
1.4 Removing and installing controls for fresh and heated air . . . 25
1.5 Removing and installing right plenum chamber . . . 25
1.6 Removing dust and pollen filter . . . 26
1.7 Removing right vent . . . 27
1.8 Removing left vent . . . 28
1.9 Removing centre vents . . . 28
1.10 Removing and installing footwell vents . . . 28
1.11 Removing and installing heater unit . . . 29
1.12 Dismantling and assembling heater unit . . . 30
1.13 Installing and adjusting cables . . . 32
1.14 Dismantling and assembling heated air and fresh air controls . . . 34

2 **Repairing heater, vehicles 10.99 ▸** . . . 35
2.1 Passenger compartment heating . . . 35
2.2 Removing fresh air blower V2 . . . 36
2.3 Removing and installing dust and pollen filter . . . 37
2.4 Removing centre vents . . . 38
2.5 Removing and installing vent on front passenger side . . . 39
2.6 Removing and installing vent on driver side . . . 40
2.7 Removing footwell vent . . . 41
2.8 Removing and installing controls for fresh and heated air . . . 42
2.9 Checking ventilation . . . 44
2.10 Removing and installing heater unit . . . 44
2.11 Dismantling and assembling heater unit . . . 46
2.12 Installing and adjusting lever for central flap . . . 46
2.13 Installation position of seal for heat exchanger and bulkhead . . . 47
2.14 Removing and installing fresh air and air recirculation flap control motor V154 . . . 47
2.15 Dismantling and assembling heated air and fresh air controls . . . 48
2.16 Installing and adjusting cables . . . 49

87 - Air conditioning system . . . 51

1 **Notes on repair work to vehicles with air conditioning and on handling refrigerant** . . . 51

2 **Air conditioning system with manual controls, vehicles ▸ 09.99** . . . 52
2.1 Repairing air conditioning and heating - passenger compartment . . . 52
2.2 Removing air conditioning system switch E30 . . . 54
2.3 Renewing fresh air blower series resistor with overheating fuse N24 . . . 55
2.4 Removing and installing fresh air blower V2 . . . 55

Protected by copyright. Copyright by Volkswagen AG. Copyright by Volkswagen AG. Volkswagen AG does not guarantee or accept any liability with respect to the correctness of information in this document. Copying for private or commercial purposes, in part or in whole, is not permitted unless authorised by Volkswagen AG.
satelettronica

2.5 Renewing temperature switch for evaporator E33 . . . 55
2.6 Removing and installing vacuum unit for fresh air and air recirculation flap . . . 55
2.7 Installing support for vacuum line . . . 56
2.8 Repairing air conditioning and heating - engine compartment . . . 56
2.9 Removing and installing air conditioning shut-off thermal switch F163 . . . 58
2.10 Removing and installing two-way valve for fresh and recirculating air flap N63 . . . 58
2.11 Removing and installing vacuum unit . . . 59
2.12 Removing and installing water drain valve . . . 59
2.13 Checking high-pressure safety valve on air conditioner compressor . . . 59
2.14 Checking air conditioning system pressure switch F129 . . . 60
2.15 Installing and adjusting cables . . . 61
2.16 Vacuum hose connection diagram . . . 63

3 Air conditioning system with manual controls, vehicles 10.99 ▸ . . . 65
3.1 Air conditioning and heating system - passenger compartment . . . 65
3.2 Removing fresh air blower V2 . . . 66
3.3 Removing and installing heating and air conditioning controls . . . 67
3.4 Dismantling and assembling heating and air conditioning controls . . . 68
3.5 Installing and adjusting heating and air conditioning cables . . . 70
3.6 Air conditioning - engine room . . . 72
3.7 Checking water drain valve . . . 74
3.8 Removing high pressure sender G65 . . . 75
3.9 Removing ambient temperature switch F38 . . . 75
3.10 Checking high-pressure safety valve on air conditioner compressor . . . 75

4 Climatronic air conditioning system with automatic regulation, vehicles 10.99 ▸ . . . 76
4.1 Function of operating and display unit for Climatronic air conditioning system E87 . . . 76
4.2 Connectors on Climatronic control unit J255 . . . 78
4.3 Climatronic - passenger compartment . . . 79
4.4 Removing and installing footwell vent temperature sender G192 . . . 83
4.5 Removing sunlight penetration photosensor G107 . . . 84
4.6 Removing fresh air blower control unit J126 . . . 84
4.7 Removing fresh air blower V2 . . . 84
4.8 Removing and installing operating and display unit for Climatronic air conditioning system E87 with Climatronic control unit J255 . . . 85
4.9 Removing and installing air flow flap control motor V71 . . . 86
4.10 Removing and installing temperature flap control motor V68 . . . 88
4.11 Removing and installing central flap control motor V70 . . . 89
4.12 Removing and installing footwell and defroster flap control motor V85 . . . 89
4.13 Climatronic - engine compartment . . . 90
4.14 Removing and installing coolant temperature sender G62 . . . 92
4.15 Removing high pressure sender G65 . . . 93
4.16 Checking water drain valve . . . 94
4.17 Removing ambient temperature sensor G17 . . . 94

5 Removing and installing air conditioner compressor . . . 95
5.1 Removing and installing air conditioner compressor: engine code ADX, AEA, AEE, AEV, AEX, AFH, AHS, AJV, AKV, ANX, APQ, ARC and AVY . . . 95
5.2 Removing and installing air conditioner compressor: engine code AER, AFK, AHW, AKK, AKP, ALD, ALL, APE, AUA, AUB, AUC und AUD . . . 97
5.3 Removing and installing air conditioner compressor with bracket: engine code AMF and ATL . . . 100
5.4 Removing and installing air conditioner compressor: engine codes AEF, AGD, AHG, AKU und ASX . . . 102
5.5 Repairing Sanden SD6 V12 air conditioning system magnetic coupling N25 . . . 104
5.6 Removing and installing Sanden SD6 V12 air conditioning system magnetic coupling N25 . . . 107
5.7 Repairing Sanden SD7 B10 air conditioning system magnetic coupling N25 with compressor removed . . . 110

satelettronica

5.8 Removing and installing Sanden SD7 B10 air conditioning system magnetic coupling N25 . . . 113

6 Repair work on refrigerant circuit which may be performed only in appropriate workshops by specially trained mechanics for vehicles ▸ 09.99 . . . 115

6.1 Tools . . . 115
6.2 Repairing components in refrigerant circuit . . . 115
6.3 Removing extraction and charging valve, low pressure side . . . 118
6.4 Removing extraction and charging valve, high pressure side . . . 118
6.5 Tasks of receiver with dryer bag . . . 119
6.6 Removing expansion valve . . . 119
6.7 Removing and installing condenser . . . 121
6.8 Dismantling and assembling evaporator housing . . . 122

7 Repair work on refrigerant circuit which may be performed only in appropriate workshops by specially trained mechanics for vehicles ▸ 10.99 . . . 125

7.1 Tools . . . 125
7.2 Renewing refrigerant circuit components . . . 125
7.3 Removing extraction and charging valve, low pressure side . . . 127
7.4 Removing extraction and charging valve, high pressure side . . . 128
7.5 Tasks of receiver with dryer bag . . . 129
7.6 Quick release coupling . . . 129
7.7 Checking high pressure sensor G65 . . . 132
7.8 Removing and installing heater and air conditioner unit . . . 135
7.9 Dismantling and assembling evaporator housing . . . 138
7.10 Expansion valve, function and removal . . . 139
7.11 Removing and installing condenser . . . 142

8 Capacities . . . 145

8.1 Refrigerant R134a . . . 145
8.2 Refrigerant oil . . . 145

Protected by copyright. Copyright for private or commercial purposes, in part or in whole, is not permitted unless authorised by Volkswagen AG. Volkswagen AG does not guarantee or accept any liability with respect to the correctness of information in this document. Copyright by Volkswagen AG.
satelettronica

Protected by copyright. Copying for private or commercial purposes, in part or in whole, is not permitted unless authorised by Volkswagen AG. Volkswagen AG does not guarantee or accept any liability with respect to the correctness of information in this document. Copyright by Volkswagen AG.

satelettronica

01 – Self-diagnosis

1 Self-diagnosis of Climatronic, vehicles 10.99 ▸

Special tools and workshop equipment required

- Vehicle diagnosis, testing and information system -VAS 5051A-

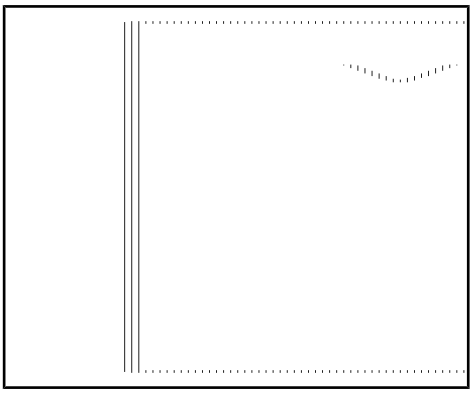

- Diagnosis lead -VAS 5051/6A-

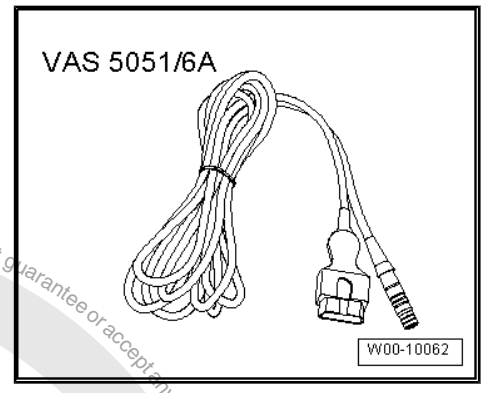

1.1 Connecting vehicle diagnosis, testing and information system -VAS 5051A- or vehicle diagnosis and service information system -VAS 5052-

– Open ash tray cover -2-.
– Pull ashtray -1- out of centre console.
– Plug connector of diagnosis lead -VAS 5051/5A- or diagnosis lead -VAS 5051/6A- into diagnostic connection.
– Switch on ignition.

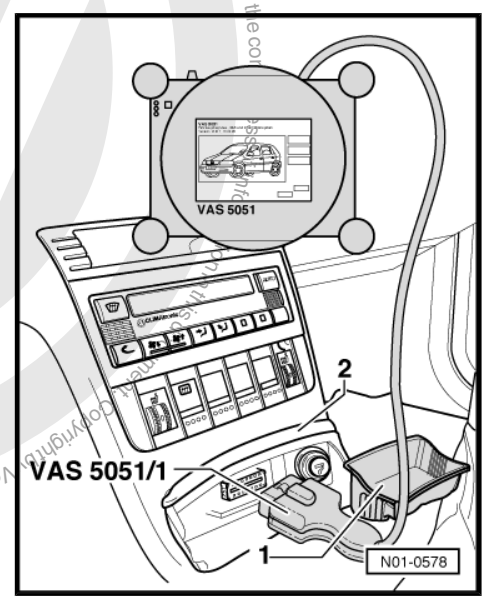

Protected by copyright. Copying for private or commercial purposes, in part or in whole, is not permitted unless authorised by Volkswagen AG. Volkswagen AG does not guarantee or accept any liability with respect to the correctness of information in this document. Copyright by Volkswagen AG.
satelettronica

Copyright by Volkswagen AG. Volkswagen AG does not guarantee or accept any liability with respect to the correctness of information in this document. Copyright by Volkswagen AG. Reproduction, in whole or in part, is not permitted without authorisation by Volkswagen AG.

1.1.1 Selecting diagnostic function

All diagnostic functions which can be performed are shown on the display.

– Press button on display for required function.

Note

- *The display fields in the functions -04- Basic setting and -08- Read measured value block are displayed from top to bottom.*
- *The following test procedures are described for the vehicle diagnosis, testing and information system -VAS 5051A- or vehicle diagnosis and service information system -VAS 5052- .*
- *Some components and functions of the Climatronic are not tested by self-diagnosis (temperature sensor blower -V42- and high pressure sender -G65-).*

Additional information:

- Measures to correct current, model-specific faults ⇒ Technical Service Handbook
- Climatronic air conditioning system with automatic regulation ⇒ page 76
- Repair work on refrigerant circuit which may be performed only in appropriate workshops by specially trained mechanics ⇒ page 115

1.2 Function

The Climatronic control unit -J255- receives information from electrical and electronic components (information transmitters). This information is processed in the Climatronic control unit -J255- in accordance with specifications. The output signals of the Climatronic control unit -J255- then control the electrical components (final controls).

The Climatronic control unit -J255- is located behind the control and display unit for Climatronic air conditioning -E87- . The two components are a single part which cannot be dismantled. So that the problem source can be quickly found when a component fails or there is an open circuit, the Climatronic control unit -J255- is equipped with a fault memory which can be read using the vehicle diagnosis, testing and information system -VAS 5051A- or the vehicle diagnosis and service information system -VAS 5052- .

Should a fault be detected in one of the monitored sensors or components, it is stored in the fault memory.

If a fault having a permanent effect on the operation of the Climatronic is stored to memory, the display of the operating and display unit for Climatronic air conditioning -E87- on Climatronic control unit -J255- flashes for approx. 15 seconds when the ignition is switched on. In the case of all faults, the Climatronic control unit -J255- can continue operation at the selected settings in emergency mode.

Self-diagnosis must be initiated at the beginning of the fault finding process and the stored information read using the vehicle diagnosis, testing and information system -VAS 5051A- or vehicle diagnosis and service information system -VAS 5052- .

The fault information displayed guide one via a fault table with notes on the possible causes to appropriate repair measures.

satelettronica

Protected by copyright. Copyright by Volkswagen AG. Volkswagen AG does not guarantee or accept any liability with respect to the correctness of information in this document. Copyright by Volkswagen AG. Reproduction, in part or whole, is not permitted unless authorised by Volkswagen AG.

1.3 Technical data of self-diagnosis

Memory:	Non-volatile
Data output:	Rapid data transfer
Interrogation of fault memory:	yes
Final control diagnosis:	yes
Basic setting:	yes
Coding control unit:	yes
Read measured value block:	yes

1.4 Test prerequisites:

- All fuses OK according to the circuit diagram.
- The battery voltage must be at least 11.5 V.
- Battery negative terminal checked for tight seating.

	page
01 - Select ⇒ vehicle diagnosis, testing and information system -VAS 5051A- or vehicle diagnosis and service information system -VAS 5052-	⇒ page 3
02 - Read fault memory.	⇒ page 4
03 - Final control diagnosis	⇒ page 5
04 - Basic setting.	⇒ page 6
05 - Erase fault memory	⇒ page 7
06 - End output	⇒ page 8
07 - Code control unit	⇒ page 9
08 - Read measured value block	⇒ page 10

1.5 Diagnosis functions with vehicle diagnosis, testing and information system - VAS 5051A- or vehicle diagnosis and service information system -VAS 5052-

– Connect vehicle diagnosis, testing and information system - VAS 5051A- or vehicle diagnosis and service information system -VAS 5052- ⇒ page 1 .

1.5.1 Selecting operating mode

– Press button on the display for “vehicle self-diagnosis” -arrow-.

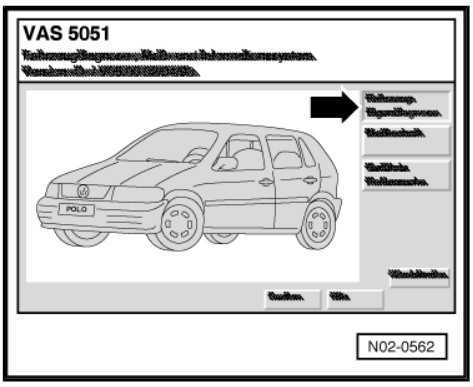

satelettronica

1.5.2 Selecting vehicle system

– Press 08 A/C-/heater electronics -arrow- on the display.

Indicated on display

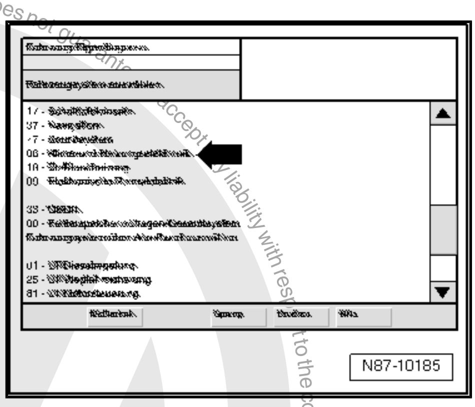

The control unit identification and code appear on the display -arrow-, e.g.:

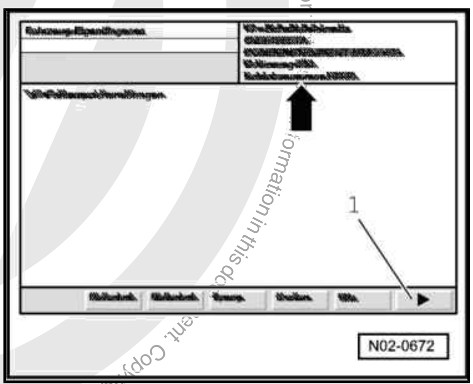

Part number for Climatronic control unit -J255-

- ♦ Left-hand drive with blue display 3B1 907 044 C.
- ♦ Right-hand drive with blue display 3B2 907 044 C.

Climatronic = System designation

SXX = Software version

Code: no code 00000 - display flashes

Code number	For vehicles
04000	All countries except Japan
04100	Japan
04001	All countries except Japan without ambient temperature display
04101	Japan without ambient temperature display

Note

- ♦ *If code differs from vehicle version:*
- ♦ *Check control unit code* *⇒ page 9* .

– Press arrow key -1- on display.

1.5.3 Reading fault memory 02

– Select vehicle system ⇒ page 4 .

satelettronica

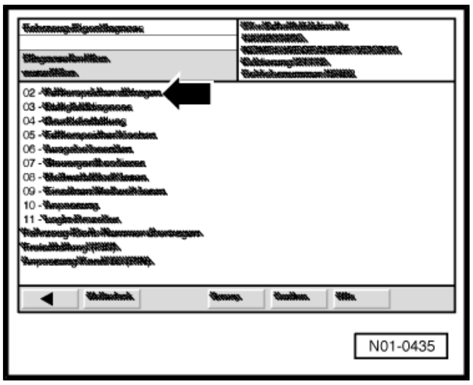

– Press “02 Read fault memory” -arrow- on the display.

Note

The fault information displayed is updated not continuously but only upon initiating self-diagnosis or activating function 05 “Erase fault memory”.

The stored faults are shown on the display.

– Press `Print` button in display and then “Screen” in print menu.

A list of faults can be found in the fault table ⇒ page 10 .

The printer of the vehicle diagnosis, testing and information system -VAS 5051A- prints the faults shown on the screen or “0 faults detected”. If faults are stored, repair measures are required. The fault log must be handed over for the repair.

– End output ⇒ page 8 .

1.5.4 Final control diagnosis 03

Note

Final control diagnosis must be carried out with engine stationary, ignition switched on and Climatronic switched off.

– To do this, switch Climatronic off via push button for reducing blower speed.

Note

- ♦ *For results to be definitive, final control diagnosis must be carried out at an ambient temperature of at least 12° as displayed on control and display panel.*
- ♦ *Climatronic is not regulated during final control diagnosis.*
- ♦ *If necessary, final control diagnosis can be repeated several times.*

– Select vehicle system ⇒ page 4 .

Protected by copyright. Copying for private or commercial purposes, in part or in whole, is not permitted unless authorised by Volkswagen AG. Volkswagen AG does not guarantee or accept any liability with respect to the correctness of information in this document. Copyright by Volkswagen AG.

sataelettronica

– Press “03 Final control diagnosis”-arrow- on the display.

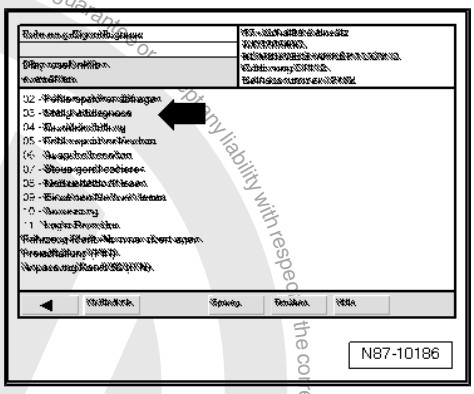

The following tests will be carried out:

- Indication of display of operating and display unit for Climatronic air conditioning system -E87- ⇒ page 6 .
- Functional test of the 4 control motors.
- Circuit to fresh air blower -V2- is tested.
- Switch sequence of control unit for air conditioning system magnetic coupling -N25- is tested.
- All sensors are checked.

The tests will be completed in about 30 seconds.

Note

After completing final control diagnosis, read fault memory *⇒ page 4* *.*

1.5.5 Checking indication of display of operating and display unit for Climatronic air conditioning system -E87-

Shows full display.

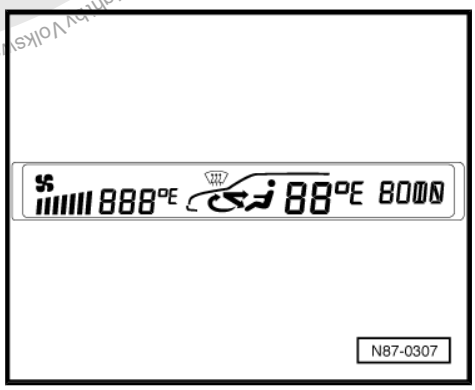

Note

All segments appear on the display during the period of the final control diagnosis 03. If not, the Climatronic control unit -J255- must be renewed.

1.5.6 Basic setting 04

Note

If the display flashes after “ignition is switched on” although no faults were shown in function “Read fault memory 02”, perform function “Code control unit 07” followed by function “Basic setting 04”.

– Connect vehicle diagnosis, testing and information system -VAS 5051A- or vehicle diagnosis and service information system -VAS 5052- ⇒ page 1 .

– Select vehicle system ⇒ page 4 .

– Interrogate fault memory ⇒ page 4 and rectify all faults shown.

– Erase fault memory ⇒ page 7 .

– Check code ⇒ page 9 and correct if necessary.

Protected by copyright. Copyright by Volkswagen AG. Volkswagen AG does not guarantee or assume any liability with respect to the correctness of information in this document. Copyright by Volkswagen AG. Reproduction or commercial use of the whole or parts only authorised by Volkswagen AG for commercial purposes.
satelettronica

– Press “04 Basic setting” -arrow- on the display.

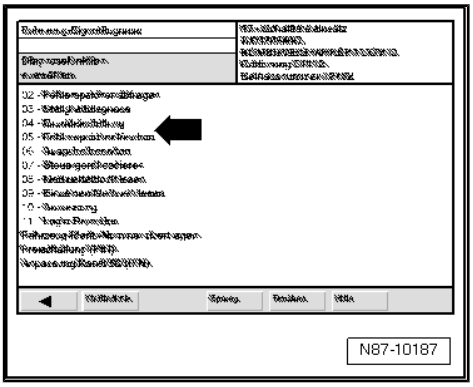

Indicated on display

– Press [0] key in number block of display -arrow-.

– Confirm entry with [Q] key.

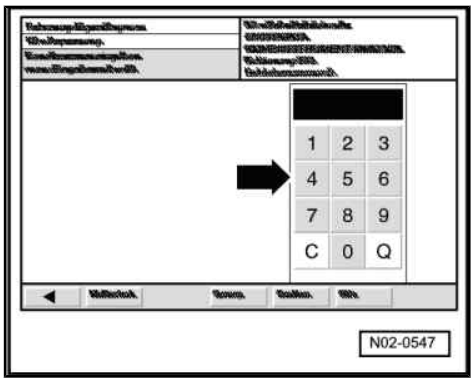

Note

When all control motors have moved to the end position, the Climatronic control unit -J255- stores all the potentiometer values, assuming in this way the basic settings of all control motors.

Indicated on display

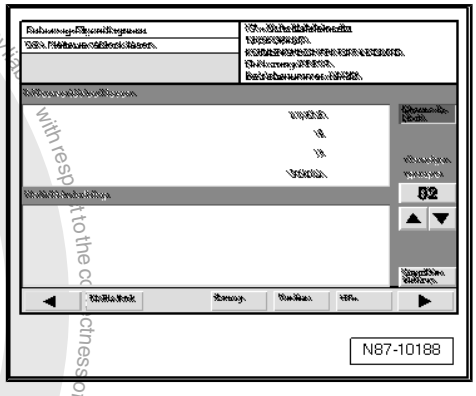

Note

The movement of the four positioning motors can be followed on the display. However, the changes in the feedback values do not indicate a faulty motor.

– Read fault memory again ⇒ page 4 .

1.5.7 Erasing fault memory 05

Note

The contents of the fault memory are automatically output after erasing it. If the fault memory cannot be erased, read the fault memory again and rectify the fault.

Prerequisite:

- Fault memory has been read ⇒ page 4 .
- All faults are rectified.

Indicated on display

satelettronica

– Press “05 Erase fault memory” -arrow- on the display.

Indicated on display

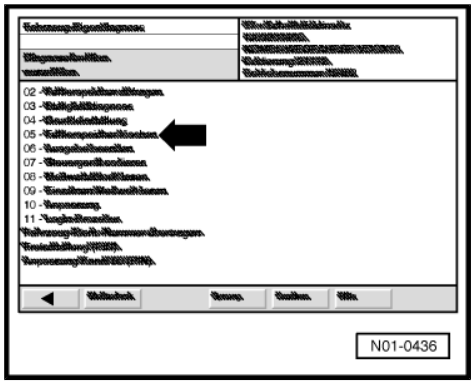

– Confirm the information -arrow-.

Indicated on display

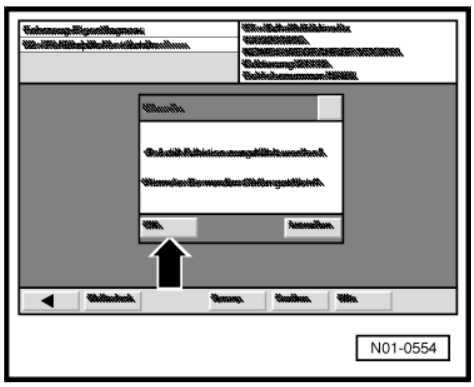

The fault memory is thus erased.

– End output ⇒ page 8 .

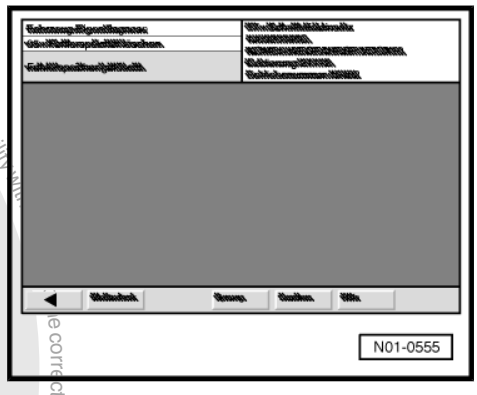

1.5.8 Ending output 06

Indicated on display

– Press `Go to` button -arrow- on the display.

Indicated on display

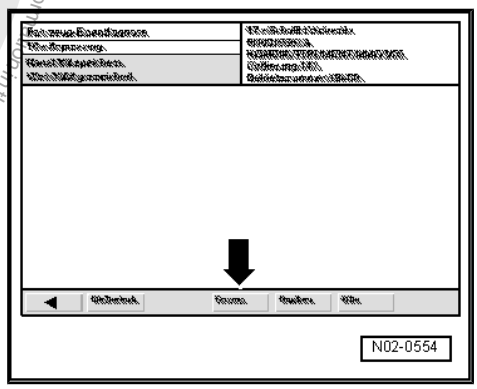

Protected by copyright. Copying for private or commercial purposes, in part or in whole, is not permitted unless authorised by Volkswagen AG. Volkswagen AG does not guarantee or accept any liability with respect to the correctness of information in this document. Copyright by Volkswagen AG.

satelettronica

– Press End button -arrow- on the display.
– Switch off ignition and disconnect the diagnostic connector.

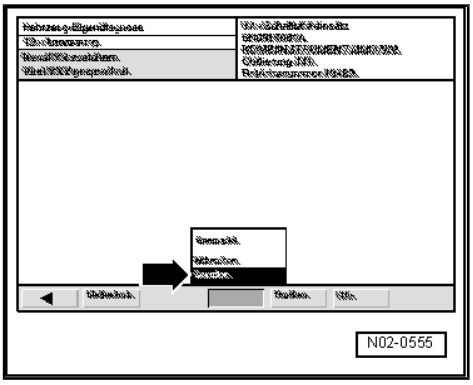

1.5.9 Coding control unit 07

Note

- *Every Climatronic control unit -J255- replacement part must be coded after installing.*
- *Perform basic setting 04 after each coding* ⇒ page 6 .
- *If the appropriate vehicle code or the appropriate equipment level is not displayed, the Climatronic control unit -J255- must be coded as follows:*
- *The display of the control and display unit for Climatronic air conditioning -E87- flashes 15 seconds if the Climatronic control unit -J255- has not been coded.*

– Connect vehicle diagnosis, testing and information system -VAS 5051A- or vehicle diagnosis and service information system -VAS 5052- ⇒ page 1 .
– Select vehicle system ⇒ page 4 .

Indicated on display

– Press 07 Coding control unit on display -arrow-.
– Enter code number and confirm with Q key.

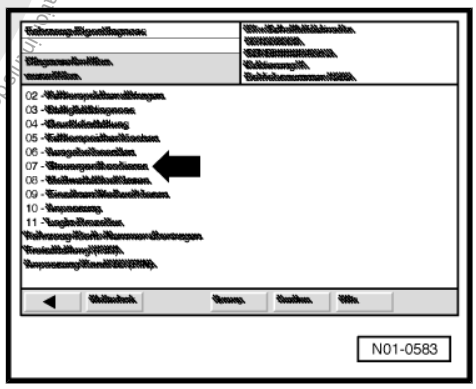

Code number	For vehicles
04000	All countries except Japan
04100	Japan
04001	All countries except Japan without ambient temperature display
04101	Japan without ambient temperature display

– Confirm entry with Q key.

Protected by copyright. Copying for private or commercial purposes, in part or in whole is not permitted unless authorised by Volkswagen AG. Volkswagen AG does not guarantee or accept any liability with respect to the correctness of information in this document. Copyright by Volkswagen AG.

satelettronica

The control unit code and part number will be displayed on the vehicle diagnosis, testing and information system -VAS 5051A- or vehicle diagnosis and service information system -VAS 5052- .

1.5.10 Read measured value block 08

Note

- *There are 4 display group numbers that can display up to 4 measured values.*
- *A 2nd mechanic is require to read measured values during a test drive.*

– Connect vehicle diagnosis, testing and information system -VAS 5051A- or vehicle diagnosis and service information system -VAS 5052- ⇒ page 1 .

– Select vehicle system ⇒ page 4 .

– Press “08 Read measured value block” -arrow- on the display.

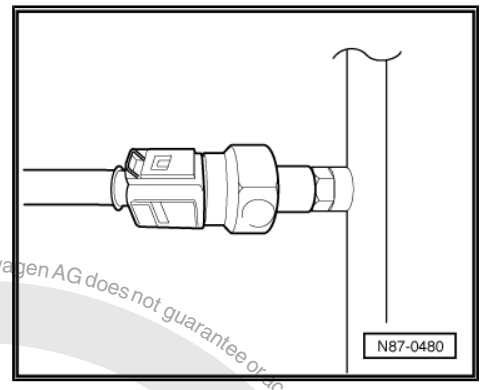

Indicated on display

– Press on numerical keypad of display -arrow- number of measured value block to be read and confirm entry by pressing Q key.

Overview of selectable display group numbers ⇒ page 17 .

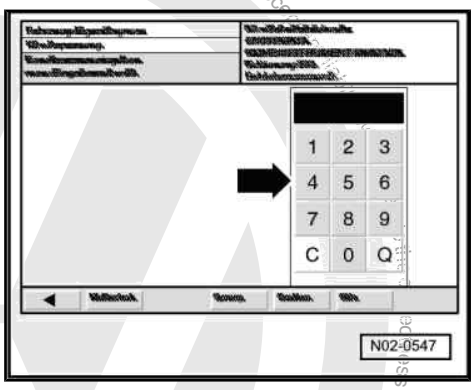

Indicated on display

The display zones are read from top to bottom.

If measured values have been read out, terminate output ⇒ page 8 .

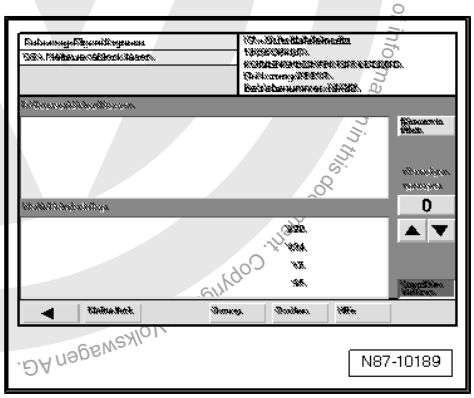

1.6 Fault table

- The following table lists all possible faults, with the corresponding 5-digit code numbers, that can be detected by the

Protected by copyright. Copying for private or commercial purposes, in part or in whole, is not permitted unless authorised by Volkswagen AG. Volkswagen AG does not guarantee or accept any liability with respect to the correctness of information in this document. Copyright by Volkswagen AG.
satelettronica

Climatronic control unit -J255- and printed from the vehicle diagnosis, testing and information system -VAS 5051A- .

- Faults which occur only occasionally are displayed as “sporadic faults” (“SP”).
- Fault codes appear only in the printout.
- The fault table may also include the type of fault.
- Following a repair, always erase fault memory using vehicle diagnosis, testing and information system -VAS 5051A- or vehicle diagnosis and service information system -VAS 5052- and read again.
- If, despite customer's complaint no fault in Climatronic can be found, carry out function “Final control diagnosis 03” ⇒ page 5 or function “Read measured value block 08” ⇒ page 10 . If display flashes although no fault was detected, start functions “07 Code control unit” and “04 Basic setting” one after the other (⇒ page 6).

Display on VAS 5051A	Possible cause of fault	Rectifying fault
00000 No fault detected	If “No fault detected” appears after repairs have been performed, self-diagnosis has been completed. If display still flashes, select the following functions one after the other: 07 Code control unit ⇒ page 6 and 04 Basic settings ⇒ page 9 .	

Display on VAS 5051A	Possible cause of fault	Rectifying fault
00281 Vehicle speed sender -G68- [1]	Short circuit or open circuit in wiring or connectors for the speedometer signal from engine control unit to Climatronic control unit Speedometer sender -G22- defective (only if speedometer -G21- is also not functioning)	Check signal from speedometer sender -G22- using “08 Read measured value block” ⇒ page 10 . Check wiring and connectors to control unit using current flow diagram. Renew speedometer sender -G22- .
Cannot be checked at present	This display appears only if final control diagnosis was carried out before reading fault memory. This fault is erased from fault memory after ignition is switched off. If speedometer sender -G68- is defective, the fault will reappear when driving.	

1) A fault is detected in speedometer sender -G22- , not in vehicle speed sender -G68- . The fault is only detected if, during 5 driving cycles (start, travel over 15 km/h, stop), no speed signal is measured within 4 minutes of engine start.

Display on VAS 5051A	Possible cause of fault	Rectifying fault
00532 Voltage supply Signal too large[2]	Alternator -C- defective	– Check supply voltage (terminal 15) using “Read measured value bock 08”⇒ ⇒ page 10 . – Check alternator -C- ⇒ Current flow diagrams, Electrical fault finding and Fitting locations.

satelettronica

Display on VAS 5051A	Possible cause of fault	Rectifying fault
Signal too small[2)]	Wiring or connectors to Climatronic control unit -J255-	– Check supply voltage (terminal 15) using “Read measured value bock 08”⇒ ⇒ page 10 . – Repair wiring and connectors according to current flow diagram. – Check alternator -C- ⇒ Current flow diagrams, Electrical fault finding and Fitting locations.

2) One of these readouts is displayed in addition to relevant component.

Display on VAS 5051A	Possible cause of fault	Rectifying fault
00538 Reference voltage		
Signal too large[3)]	Short circuit or open circuit in wiring or connectors. Note wiring of connector housing T16b8 on Climatronic control unit -J255- to control motors.	– Check wiring and connectors to control unit using current flow diagram.
Signal too small[3)]		– Check function of control motors for regulating air conditioning system via final control diagnosis 03 ⇒ page 5 .
	Temperature flap control motor potentiometer -G92- or central flap control motor potentiometer -G112- or air flow flap control motor potentiometer -G113- or footwell/defroster flap control motor potentiometer -G114- defective	– Pull off connectors to these components one at a time, erase fault memory ⇒ page 7 and read fault memory again ⇒ page 4 . If the “reference voltage” fault is no longer detected, renew the motor which leads to a fault when reconnected.
	Climatronic control unit -J255- defective	– Replace control unit if necessary and then select the following functions one after another: Code control unit 07 ⇒ page 9 , Adjust basic setting 04 ⇒ page 6 .

3) One of these readouts is displayed in addition to relevant component.

Display on VAS 5051A	Possible cause of fault	Rectifying fault
00603 Footwell and defroster flap control motor -V85-		
	Short circuit or open circuit in wiring or connectors to footwell and defroster flap control motor -V85- .	– Perform final control diagnosis 03 ⇒ page 5 . – Check footwell and defroster flap control motor -V85- using “read measured value block 08” ⇒ page 10 . – Repair wiring and connectors according to current flow diagram.
	Footwell and defroster flap control motor -V85- blocked	– Perform final control diagnosis -03 ⇒ page 5 .
	Footwell and defroster flap control motor -V85- defective [4)]	– Renew footwell and defroster flap control motor -V85- . Then select function Initiate basic setting 04, ⇒ page 6 .

Protected by copyright. Copyright by Volkswagen AG.
Copyright by Volkswagen AG. Volkswagen AG does not accept any liability with respect to the correctness of information in this document. Copying for private or commercial purposes, in part or in whole, is not permitted unless authorised by Volkswagen AG.
satelettronica

4) This fault is detected in Basic setting 04, Final control diagnosis 03 and in normal operation. Both end stops must be reached.

Display on VAS 5051A	Possible cause of fault	Rectifying fault
00779 Ambient temperature sensor -G17-		
Open circuit/short to positive [5]	Short to positive or open circuit in wiring or connectors to ambient temperature sensor -G17-	– Check ambient temperature sensor -G17- using “Read measured value block 08” ⇒ page 10 . – Repair wiring and connectors according to current flow diagram.
Short to earth[5]	Short to earth in wiring or connectors to ambient temperature sensor -G17-	– Check ambient temperature sensor -G17- using “Read measured value block 08” ⇒ page 10 . – Repair wiring and connectors according to current flow diagram.
	Ambient temperature sensor -G17- defective	– Renew ambient temperature sensor -G17- .

5) One of these readouts is displayed in addition to relevant component.

Display on VAS 5051A	Possible cause of fault	Rectifying fault
00787 Fresh air intake duct temperature sensor -G89-		
Open circuit/short to positive [6]	Short to positive or open circuit in wiring or connectors to fresh air intake duct temperature sensor -G89-	– Check fresh air intake duct temperature sensor -G89- using “Read measured value block 08” ⇒ page 10 . – Repair wiring and connectors according to current flow diagram.
Short to earth[6]	Short to earth in wiring or connectors to fresh air intake duct temperature sensor -G89-	– Check fresh air intake duct temperature sensor -G89- using “Read measured value block 08” ⇒ page 10 . – Repair wiring and connectors according to current flow diagram.
	Fresh air intake duct temperature sensor -G89- defective	– Renew fresh air intake duct temperature sensor -G89- .

6) One of these readouts is displayed in addition to relevant component.

Display on VAS 5051A	Possible cause of fault	Rectifying fault
00792 Air conditioning system pressure switch -F129- [7] [8]		

Copyright by Volkswagen AG. Volkswagen AG does not guarantee or accept any liability with respect to the correctness of information in this document. Copyright by Volkswagen AG. Reproduced by copyright. Copying for private or commercial purposes, in part or in whole, is not permitted unless authorised by Volkswagen AG.
satelettronica

Volkswagen AG. Volkswagen AG does not guarantee or accept any liability with respect to the correctness of information in this document. Copyright by Volkswagen AG. Copying for private or commercial purposes, in part or in whole, is not permitted unless authorised by Volkswagen AG.

Display on VAS 5051A	Possible cause of fault	Rectifying fault
	Short circuit or open circuit in wiring or connectors to air conditioning system pressure switch -F129- . Improper filling of refrigerant circuit. Engine cooling insufficient	– Check air conditioning system pressure switch -F129- using “Read measured value block 08” ⇒ page 10 . – Repair wiring and connectors according to current flow diagram. – Take vehicle to specialist workshop. – Check engine cooling ⇒ Rep. Gr. 19. .
	Air conditioning system pressure switch -F129- defective	– Renew air conditioning system pressure switch -F129- .
Cannot be checked at present	This display appears only if the final control diagnosis 03 was performed and the air conditioning system pressure switch -F129- could not be checked (e.g. ambient temperature below 12°) before the fault memory was read. This fault is erased from fault memory after ignition is switched off.	

7) This fault cannot be detected if the ambient temperature is below 12° C or if the ambient temperature sensor -G17- and the fresh air intake duct temperature sensor -G89- are defective. The switch is a triple switch. The 2 bar/32 bar switching part is tested, but not the 16-bar switching part.

8) The high pressure sender -G65- may be installed in place of the air conditioning system pressure switch -F129- , and the same fault message will be the same. Check high pressure sender -G65- ⇒ page 132 .

Display on VAS 5051A	Possible cause of fault	Rectifying fault
00797 Sunlight penetration photosensor -G107-		
Open circuit/short to positive [9]	Open circuit or short to positive in wiring or connectors to sunlight penetration photo sensor -G107- .	– Check sunlight penetration photosensor -G107- using “Read measured value block 08” ⇒ page 10 . – Repair wiring and connectors according to current flow diagram.
Short to earth[9]	Short to earth in wiring or connectors to sunlight penetration photo sensor -G107- defective	– Check sunlight penetration photosensor -G107- using “Read measured value block 08” ⇒ page 10 . – Repair wiring and connectors according to current flow diagram. – Renew sunlight penetration photosensor -G107- .

9) One of these readouts is displayed in addition to relevant component.

Display on VAS 5051A	Possible cause of fault	Rectifying fault
01206 Signal for duration of -Ignition OFF- [10].		

satelettronica

Display on VAS 5051A	Possible cause of fault	Rectifying fault
	Short circuit or open circuit in wiring or connectors.	– Check time parked signal using “Read measured value block 08” ⇒ page 10 . – Repair wiring and connectors according to current flow diagram.
	Climatronic control unit -J255- defective	Renew Climatronic control unit -J255- . Then select following functions one after another: Code control unit 07, ⇒ page 9 and Initiate basic setting 04, ⇒ page 6 .

10) Signal for duration of -Ignition OFF- . When the vehicle is parked (ignition switched off) and then restarted within 2 hours, the Climatronic control unit -J255- evaluates the signal "duration of -Ignition OFF-" to replace the values of the ambient air temperature sensor -G17- and the fresh air intake duct temperature sensor -G89- with the values at the point when the engine was switched off. The measured values will otherwise be falsified by the heat radiated from the stationary engine. The signal "duration - Ignition OFF-" comes only following a start.

Display on VAS 5051A	Possible cause of fault	Rectifying fault
01271 Temperature flap control motor -V68- [11]	Short circuit or open circuit in wiring or connectors to temperature flap control motor -V68-	– Check temperature flap control motor -V68- using “Read measured value block 08” ⇒ page 10 . – Repair wiring and connectors according to current flow diagram.
	Temperature flap control motor -V68- installed without the use of function “Initiate basic setting 04”	– Check end position of temperature flap control motor -V68- while installed: perform final control diagnosis 03 ⇒ page 5 .
	Temperature flap control motor -V68- blocked	– Perform final control diagnosis 03 ⇒ page 5 .
	Temperature flap control motor -V68- defective	– Renew temperature flap control motor -V68- and initiate function Basic setting 04 ⇒ page 6 .

11) This fault is detected in Basic setting 04, Final control diagnosis 03 and in normal operation. Both end stops must be reached.

Display on VAS 5051A	Possible cause of fault	Rectifying fault
01272 Central flap control motor -V70- [12]	Short circuit or open circuit in wiring or connectors to central flap control motor -V70-	– Check central flap control motor -V70- using “Read measured value block 08” ⇒ page 10 . – Repair wiring and connectors according to current flow diagram.
	Central flap control motor -V70- blocked	– Perform final control diagnosis 03 ⇒ page 5 .
	Central flap control motor -V70- defective	– Renew central flap control motor -V70- and initiate function Basic setting 04 ⇒ page 6 .

12) This fault is detected in Basic setting 04, Final control diagnosis 03 and in normal operation. Both end stops must be reached.

Protected by copyright. Copying for private or commercial purposes, in whole or in part, is not permitted unless authorised by Volkswagen AG. Volkswagen AG does not guarantee or accept any liability with respect to the correctness of information in this document. Copyright by Volkswagen AG.
satelettronica

Display on VAS 5051A	Possible cause of fault	Rectifying fault
01273 Fresh air blower -V2- or control unit for fresh air blower -J126-		
	Short circuit or open circuit in wiring or connectors to fresh air blower -V2-	– Check fresh air blower -V2- using “Read measured value block 08” ⇒ page 10 . – Repair wiring and connectors according to current flow diagram.
	Fresh air blower control unit -J126- or fresh air blower -V2- defective	– Perform final control diagnosis -03 ⇒ page 5 . – Renew fresh air blower control unit -J126- or fresh air blower -V2- .

Display on VAS 5051A	Possible cause of fault	Rectifying fault
01274 Air flow flap control motor -V71-[13]		
	Short circuit or open circuit in wiring or connectors to air flow flap control motor -V71-	– Check air flow flap control motor -V71- using “Read measured value block 08” ⇒ page 10 . – Repair wiring and connectors according to current flow diagram.
	Air flow flap control motor -V71- blocked	– Perform final control diagnosis -03 ⇒ page 5 .
	Air flow flap control motor -V71- defective	– Renew air flow flap control motor -V71- and initiate function Basic setting 04 ⇒ page 6 .

13) This fault is detected in Basic setting 04, Final control diagnosis 03 and in normal operation. Both end stops must be reached.

Display on VAS 5051A	Possible cause of fault	Rectifying fault
01296 Centre vent temperature sender -G191-		
	Centre vent temperature sender -G191- is not installed.	
Open circuit/short to positive[14]	Climatronic control unit -J255- incorrectly coded.	– Select the following functions one after another: Code control unit 07 ⇒ page 9 , Initiate basic setting 04 ⇒ page 6 .
Short to earth[14]	Climatronic control unit -J255- incorrectly coded.	– Select the following functions one after another: Code control unit 07 ⇒ page 9 , Initiate basic setting 04 ⇒ page 6 .

14) One of these readouts is displayed in addition to relevant component.

Display on VAS 5051A	Possible cause of fault	Rectifying fault
01297 Footwell vent temperature sender -G192-		

Protected by copyright. Copying for private or commercial purposes, in part or in whole, is not permitted unless authorised by Volkswagen AG. Volkswagen AG does not guarantee or accept any liability with respect to the correctness of information in this document. Copyright by Volkswagen AG.

satelettronica

Display on VAS 5051A	Possible cause of fault	Rectifying fault
Open circuit/short to positive [15]	Short to positive or open circuit in wiring or connectors to footwell vent temperature sender -G192-	– Check footwell vent temperature sender -G192- using “Read measured value block 08” ⇒ page 10 . – Repair wiring and connectors according to current flow diagram.
Short to earth[15]	Short to earth in wiring or connectors to footwell vent temperature sender -G192- defective	– Check footwell vent temperature sender -G192- using “Read measured value block 08” ⇒ page 10 . – Repair wiring and connectors according to current flow diagram. – Renew footwell vent temperature sender -G192-

15) One of these readouts is displayed in addition to relevant component.

Display on VAS 5051A	Possible cause of fault	Rectifying fault
65535 Climatronic control unit -J255-	Wiring or connectors to Climatronic control unit -J255- defective	– Check wiring and connectors using current flow diagram. – Check Climatronic control unit -J255- using “Read measured value block 08” ⇒ page 10 . Renew Climatronic control unit -J255- . Then select following functions one after another: Code control unit 07 ⇒ page 9 , Initiate basic setting 04, ⇒ page 6 .

1.7 Overview of selectable display group numbers in measured value block 08

Display group number	Display zone	Designation
001	1	Air conditioner compressor, air conditioning system magnetic coupling -N25-
		Code 0: air conditioning system magnetic coupling -N25- is not switched off. (Code numbers 1 through 12 state reason for being switched off.)
		Code 1: is not displayed.
		Code 2: air conditioning system magnetic coupling -N25- is switched off because fresh air blower -V2- or fresh air blower control unit -J126- is defective.
		Code 3: is not displayed.
		Code 4: is not displayed.
		Code 5: air conditioning system magnetic coupling -N25- switched off for 4 seconds (no defect). Code 5 appears for only 5 seconds. If it remains, check engine speed signal.
		Code 6: air conditioning system magnetic coupling -N25- is switched off. ECON mode (no defect).
		Code 7: air conditioning system magnetic coupling -N25- is switched off because blower output was switched off via blower button (no defect).

Protected by copyright. Copying for private or commercial purposes, in part or in whole, is not permitted unless authorised by Volkswagen AG. Volkswagen AG does not guarantee or accept any liability with respect to the correctness of information in this document. Copyright by Volkswagen AG.

satelettronica

Display group number	Display zone	Designation
		Code 8: air conditioning system magnetic coupling -N25- is switched off because ambient air temperature is below 3° C (to prevent icing, no defect). Check ambient air temperature sensor -G17- and fresh air intact duct temperature sensor -G89- as appropriate.
		Code 9: is not displayed.
		Code 10: air conditioning system magnetic coupling -N25- is switched off because voltage in vehicle power supply is below 9.5 V.
		Code 11: air conditioning system magnetic coupling -N25- is switched off by HOT warning lamp switch (instrument cluster) via Climatronic control unit -J255- .
		Code 12: air conditioning system magnetic coupling -N25- is switched off by automatic gearbox control unit or engine control unit via Climatronic control unit -J255- .
	2	Engine speed detected
		Code 0: no
		Code 1: yes
	3	Vehicle speed
		Display: 0 to 255 km/h
	4	Parked time
		Code 0 to 240: time in minutes for “ignition OFF”
		Code 250: battery was disconnected.
		Code 255: faulty data transmission

Note

After completing “Read measured value block” function, read fault memory ⇒ page 4 .

Display group number	Display zone	Designation
002	1	Temperature flap control motor -V68-
		Code for measured value: 0 to 255
		Permissible deviation from specification ±2
	2	Temperature flap control motor -V68-
		Specification 0 to 255
	3	Temperature flap control motor -V68- flap stop: cold
		Code 0 to 149: temperature flap control motor -V68- defective
		Code 150 to 250: temperature flap control motor -V68- is OK under condition that basic setting 04 was carried out.
		Code 251 to 255: temperature flap control motor -V68- defective
	4	Temperature flap control motor -V68- flap stop: warm
		Code 0 to 4: temperature flap control motor -V68- defective
		Code 5 to 100: temperature flap control motor -V68- is OK under condition that basic setting 04 was carried out.
		Code 101 to 255: temperature flap control motor -V68- defective

Copyright Volkswagen AG, Wolfsburg. Volkswagen AG does not guarantee or accept any liability with respect to the correctness of information in this document. Copyright by Volkswagen AG. Any transmission or duplication, even in part, is not permitted unless authorised by Volkswagen AG for commercial purposes, in part or in whole, is not permitted unless authorised by Volkswagen AG. Any use for commercial purposes or private or other purposes is also prohibited.
satelettronica

Note

After completing “Read measured value block” function, read fault memory ⇒ page 4 .

Display group number	Display zone	Designation
003	1	Central flap control motor -V70-
		Code for measured value: 0 to 255
		Permissible deviation from specification ±2
	2	Central flap control motor -V70-
		Specification 0 to 255
	3	Central flap control motor -V70- flap stop: air to dash panel vents
		Code 0 to 149: central flap control motor -V70- defective
		Code 150 to 250: central flap control motor -V70- is OK under condition that basic setting 04 was carried out.
		Code 251 to 255: central flap control motor -V70- defective
	4	Central flap control motor -V70- flap stop: air to footwell and defroster vents
		Code 0 to 4: central flap control motor -V70- defective
		Code 5 to 100: central flap control motor -V70- is OK under condition that basic setting 04 was carried out.
		Code 101 to 255: central flap control motor -V70- defective

Note

After completing “Read measured value block” function, read fault memory ⇒ page 4 .

Display group number	Display zone	Designation
004	1	Footwell and defroster flap control motor -V85-
		Code for measured value: 0 to 255
		Permissible deviation from specification ±2
	2	Footwell and defroster flap control motor -V85-
		Specification 0 to 255
	3	Footwell and defroster flap control motor -V85- flap stop: air to footwell
		Code 0 to 149: footwell and defroster flap control motor -V85- defective
		Code 150 to 250: footwell and defroster flap control motor -V85- is OK under condition that basic setting 04 was carried out.
		Code 251 to 255: footwell and defroster flap control motor -V85- defective
	4	Footwell and defroster flap control motor -V85- flap stop: air to windscreen
		Code 0 to 4: footwell and defroster flap control motor -V85- defective
		Code 5 to 100: footwell and defroster flap control motor -V85- is OK under condition that basic setting 04 was carried out.

Protected by copyright. Copying for private or commercial purposes, in part or in whole, is not permitted unless authorised by Volkswagen AG. Volkswagen AG does not guarantee or accept any liability with respect to the correctness of information in this document. Copyright by Volkswagen AG.

sateletronica

Display group number	Display zone	Designation
		Code 101 to 255: footwell and defroster flap control motor -V85- defective

Protected by copyright. Copying for private or commercial purposes, in part or in whole, is not permitted unless authorised by Volkswagen AG. Volkswagen AG does not guarantee or accept any liability with respect to the correctness of information in this document. Copyright by Volkswagen AG.

Note

After completing "Read measured value block" function, read fault memory ⇒ page 4 .

Display group number	Display zone	Designation
005	1	Air flow flap control motor -V71-
		Code for measured value: 0 to 255
		Permissible deviation from specification ±2
	2	Air flow flap control motor -V71-
		Specification 0 to 255
	3	Air flow flap control motor -V71- flap stop: fresh air to passenger compartment
		Code 0 to 149: air flow flap control motor -V71- defective
		Code 150 to 250: air flow flap control motor -V71- is OK under condition that basic setting 04 was carried out.
		Code 251 to 255: air flow flap control motor -V71- defective
	4	Air flow flap control motor -V71- flap stop: air recirculation in passenger compartment
		Code 0 to 4: air flow flap control motor -V71- defective
		Code 5 to 100: air flow flap control motor -V71- is OK under condition that basic setting 04 was carried out.
		Code 101 to 255: air flow flap control motor -V71- defective

Note

After completing "Read measured value block" function, read fault memory ⇒ page 4 .

Display group number	Display zone	Designation
006	1	Value in °C calculated by Climatronic control unit -J255- and displayed on control and display unit for Climatronic air conditioning system -E87-
		Value is calculated from temperature measurements of fresh air intake duct temperature sensor -G89- and ambient air temperature sensor -G17- . The values is less than indicated by the measurements from the ambient air temperature sensor -G17- and the fresh air intake duct temperature sensor -G89- if the vehicle is parked.
		If the measurements of the ambient air temperature sensor -G17- and the fresh air intake duct temperature sensor -G89- indicate the current value, there is no defect. The values approach each other during longer trips. The ambient air temperature sensor -G17- or the fresh air intake duct temperature sensor -G89- is defective if the value is extremely unusual.
	2	Fresh air intake duct temperature sensor -G89- , current measurement in °C

satelettronica

Display group number	Display zone	Designation
	3	Ambient air temperature sensor -G17- , current measurement in °C
	4	Sunlight penetration photo sensor -G107- , measurement in %, from 0 to 120

Note

After completing "Read measured value block" function, read fault memory ⇒ page 4 .

Display group number	Display zone	Designation
007	1	Centre vent temperature sender -G191- display -53.0° C Disregard value because centre vent temperature sender -G191- is not installed.
	2	Footwell vent temperature sensor -G192- , current measurement in °C
	3	Dash panel temperature sensor -G56- , current measurement in °C
	4	No display

Note

After completing "Read measured value block" function, read fault memory ⇒ page 4 .

Display group number	Display zone	Designation
008	1	Fresh air blower -V2- , specification in Volts
		Off: 0 V
		One blower bar: 3.6 V
		Seven blower bars: 12 V
	2	Fresh air blower -V2-
		Actual value measured in Volts
		Permissible deviation from specification ±0.8 V
	3	Terminal 15
		Measurement: voltage in Volts
	4	Voltage at air conditioning system magnetic coupling -N25-
		Measurement: voltage in Volts
		Not measured

Note

After completing "Read measured value block" function, read fault memory ⇒ page 4 .

Copyright. Copying for private or commercial purposes, in part or in whole, is not permitted unless authorised by Volkswagen AG. Volkswagen AG does not guarantee or accept any liability with respect to the correctness of information in this document. Copyright by Volkswagen AG.
satelettronica

80 – Heating

1 Repairing heater, vehicles ▸ 09.99

1.1 Passenger compartment heating

1.1.1 Before beginning repair work, perform the following steps:

– Switch off all electrical consumers.
– Switch off ignition.
– Pull out ignition key.

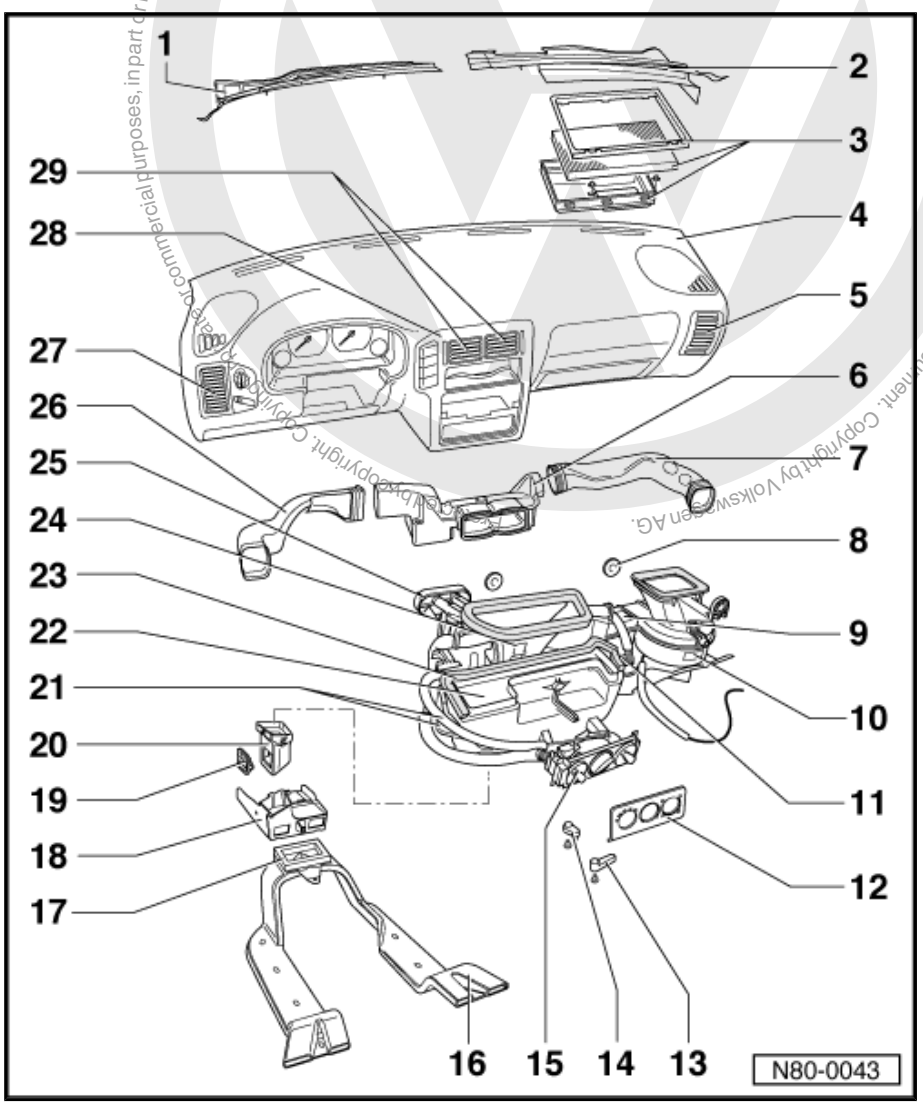

1 - Left plenum chamber cover

2 - Right plenum chamber cover

❑ Removing and installing ⇒ page 25 .

3 - Dust and pollen filter

❑ Removing ⇒ page 26 .

4 - Dash panel

❑ Removing and installing ⇒ Rep. Gr. 70 .

5 - Right vent

❑ Removing ⇒ page 27 .

❑ Do not dismantle further (vent and adjustable louver are one spare part).

6 - Air distribution duct, upper part

❑ Renewing: remove centre vent ⇒ Item 28 (page 23) and remove air distribution duct ⇒ Item 22 (page 23) .

7 - Right air duct

❑ Removing and installing: first remove glove box or front passenger side airbag unit ⇒ Rep. Gr. 69 .

8 - Hexagon nut M6

❑ 5 Nm.

9 - Heater unit

❑ Removing and installing ⇒ page 29 .

10 - Fresh air blower -V2-

❑ Removing ⇒ page 24 .

Copyright by Volkswagen AG. Volkswagen AG does not guarantee or accept any liability with respect to the correctness of information in this document. Copyright by Volkswagen AG. Copyright. Copy, distribution and use for commercial purposes, in part or in whole, is not permitted unless authorised by Volkswagen AG.
satelettronica

11 - Fresh air blower series resistor with overheating fuse -N24-

- ❑ Removing and installing ⇒ page 24 .

12 - Trim panel for controls

- ❑ Carefully unclip using screwdriver.

13 - Central flap lever

- ❑ Removing and installing: first remove footwell vents ⇒ Item 20 (page 23) and ⇒ Item 18 (page 23) .

14 - Temperature flap lever

- ❑ Removing and installing: first remove footwell vents ⇒ Item 20 (page 23) and ⇒ Item 18 (page 23) .

15 - Controls for fresh and heated air

- ❑ Removing and installing ⇒ page 25 .
- ❑ Dismantling and assembling ⇒ page 34 .
- ❑ Installing and adjusting cables ⇒ page 32 .

16 - Rear duct

- ❑ Renewing: first remove centre console, footwell vents ⇒ Item 20 (page 23) and ⇒ Item 18 (page 23), seats and carpet.

17 - Seal for rear duct

- ❑ Renewing: first remove footwell vent ⇒ Item 20 (page 23) .

18 - Footwell vent, lower part

- ❑ Removing and installing ⇒ page 28 .

19 - Air duct grille

20 - Footwell vent, lower part

- ❑ Removing and installing ⇒ page 28 .

21 - Cables

- ❑ Renewing: first remove centre vent ⇒ Item 28 (page 23) , footwell vents ⇒ Item 20 (page 23) and front passenger side compartment
- ❑ Installing and adjusting ⇒ page 32 .

22 - Air distribution duct, lower part

- ❑ Renewing: remove centre vent ⇒ Item 28 (page 23) .

23 - Seal

- ❑ Renew.

24 - Intermediate piece

- ❑ With seal.
- ❑ Renewing: first remove dash panel ⇒ Rep. Gr. 70 .

25 - Heat exchanger

- ❑ Renewing: remove heater unit ⇒ page 29 .
- ❑ Removing and installing: ⇒ page 30 .
- ❑ After removal, completely renew coolant.

26 - Left air duct

- ❑ Removing and installing: first remove left vent ⇒ Item 27 (page 23) and dash panel insert.

27 - Left vent

- ❑ Removing ⇒ page 28 .
- ❑ Do not dismantle further (vent and adjustable louver are one spare part).

28 - Central vents

- ❑ Removing ⇒ page 28 .

29 - Adjustable louver

- ❑ For centre vent.

Protected by copyright. Copying for private or commercial purposes, in part or in whole, is not permitted unless authorised by Volkswagen AG. Volkswagen AG does not guarantee or accept any liability with respect to the correctness of information in this document. Copyright by Volkswagen AG.
satelettronica

– Carefully pull out using long nose pliers.

1.2 Removing and installing fresh air blower series resistor with overheating fuse - N24-

1.2.1 Removing

– Open air duct cover to side.
– Pull off connectors.
– Press tabs on sides together and pull out series resistor.

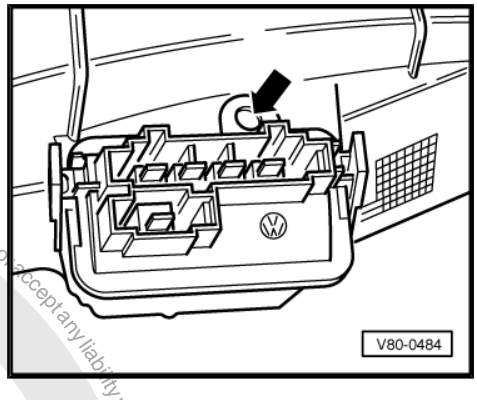

Note

If tabs on sides do not engage during installation, the series resistor can be installed with a self-tapping screw -arrow-.

1.2.2 Installing

– Seal area between series resistor and air duct with AMV 176 000 05 before fitting.

1.3 Removing fresh air blower -V2-

1.3.1 Removing

– Open air duct cover to side.
– Pull connector -1- off series resistor.
– Release retainer -3- then turn fresh air blower -2- in -direction of arrow- and remove.

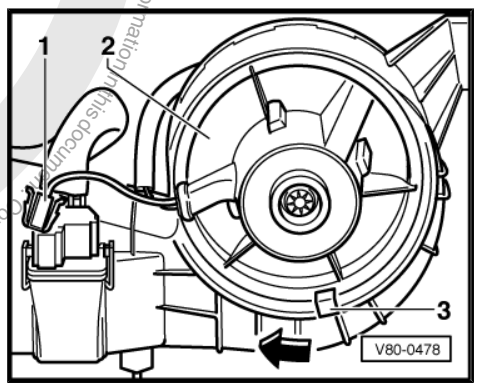

Protected by copyright. Copying for private or commercial purposes, in part or in whole, is not permitted unless authorised by Volkswagen AG. Volkswagen AG does not guarantee or accept any liability with respect to the correctness of information in this document. Copyright by Volkswagen AG.
satelettronica

1.4 Removing and installing controls for fresh and heated air

1.4.1 Removing

– Remove centre vent -2- ⇒ page 28 .
– Pull controls -1- with cables attached out of dash panel.

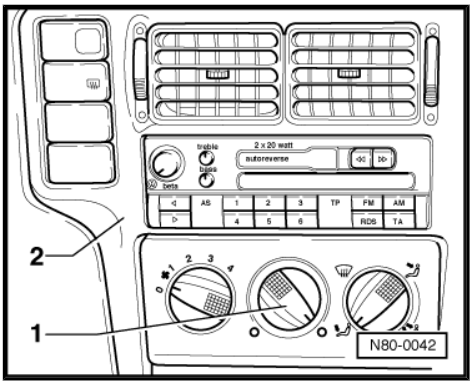

1.4.2 Installing

– Attach cables to removed controls.

1.5 Removing and installing right plenum chamber

1.5.1 Removing

– Pull off rubber seal -1- upwards to centre of vehicle.
– Unclip plenum chamber cover -2- -arrows- and pull out.

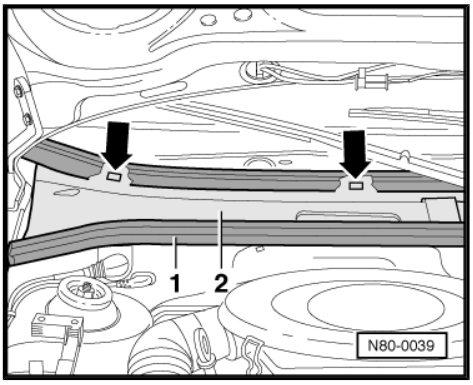

1.5.2 Installing

Install in reverse order.

Protected by copyright. Copying for private or commercial purposes, in part or in whole, is not permitted unless authorised by Volkswagen AG. Volkswagen AG does not guarantee or accept any liability with respect to the correctness of information in this document. Copyright by Volkswagen AG.

satelettronica

1.6 Removing dust and pollen filter

1 - Frame

2 - Filter element

3 - Plastic nuts

4 - Filter housing with seal

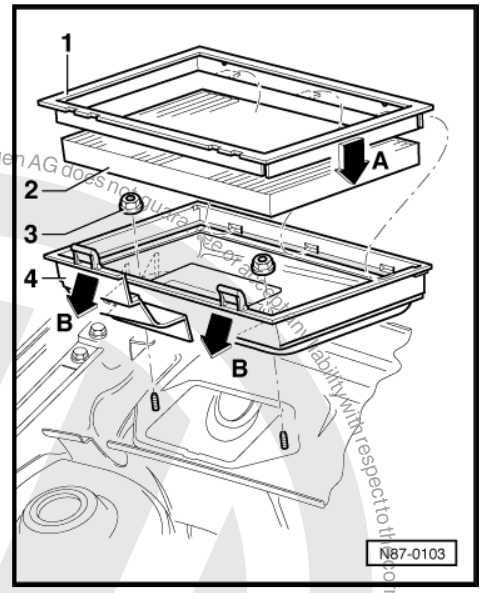

1.6.1 Removing

– Press tabs of filter housing in -direction of arrow B- and remove filter element with frame.

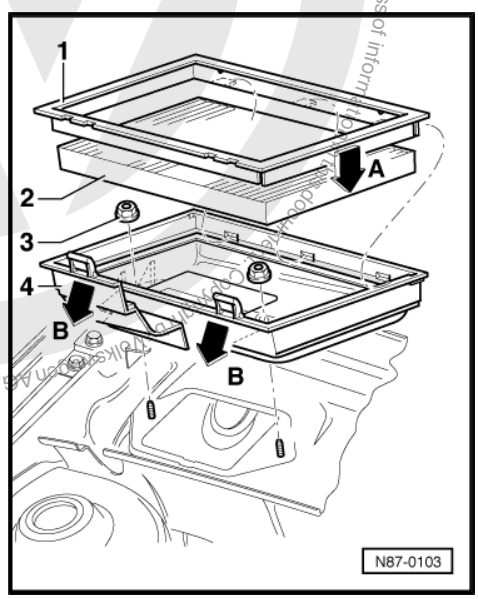

Protected by copyright. Copying for private or commercial purposes, in part or in whole, is not permitted unless authorised by Volkswagen AG. Volkswagen AG does not guarantee or accept any liability with respect to the correctness of information.
Copyright by Volkswagen AG.
satelettronica

1.6.2 Installing

– Frame must engage in first fin of filter element -arrow A-.

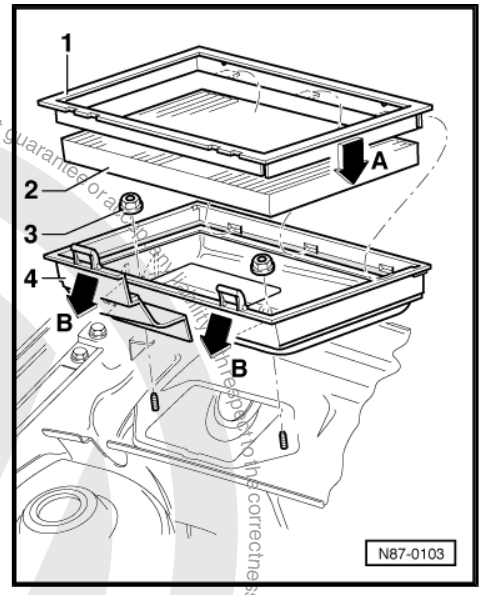

1.7 Removing right vent

1.7.1 Removing

– Unclip vent housing -arrows-.

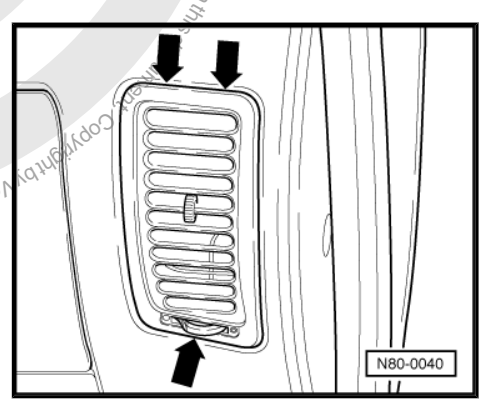

Note

Do not dismantle housing and adjustable louver further (vent and adjustable louver are one spare part).

Protected by copyright. Copying for private or commercial purposes, in part or in whole, is not permitted unless authorised by Volkswagen AG. Volkswagen AG does not guarantee or accept any liability with respect to the correctness of information in this copy. Copyright by Volkswagen AG.
satelettronica

1.8 Removing left vent

1.8.1 Removing

– Remove light switch ⇒ Rep. Gr. 96 .
– Unclip vent housing -arrows-.

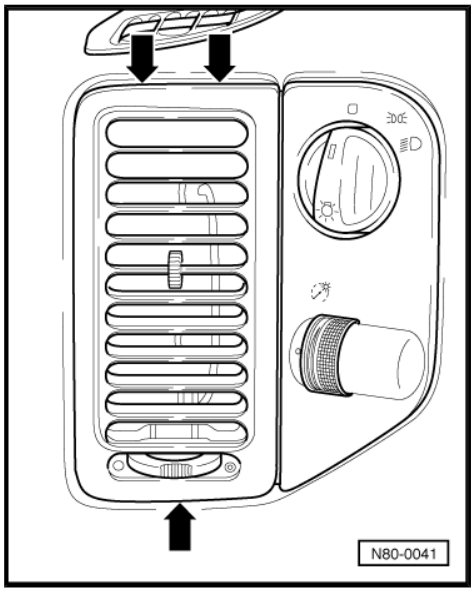

Note

Do not dismantle housing and adjustable louver further (vent and adjustable louver are one spare part).

1.9 Removing centre vents

1.9.1 Removing

– Remove radio ⇒ Rep. Gr. 91 .
– Remove switch.
– Unclip trim panel for controls.
– Unbolt controls -2-.
– Remove centre console -4- ⇒ Rep. Gr. 68 .
– Remove 3 bolts -arrows A-.
– Pull adjustable louver -3- out carefully with pointed pliers.
– Remove 2 bolts -arrows B- and remove centre vent -1-.

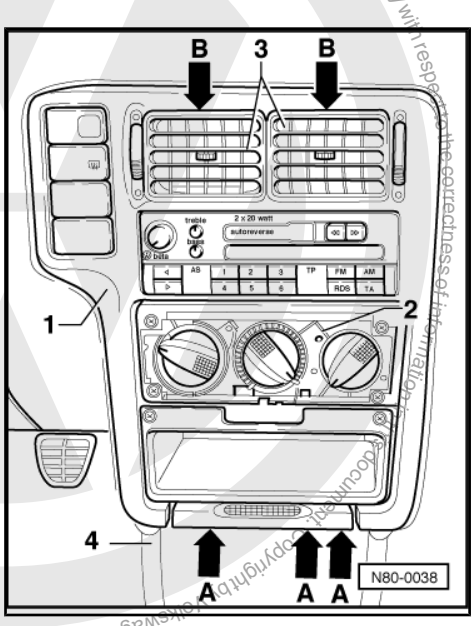

1.10 Removing and installing footwell vents

1.10.1 Removing

– Remove driver side footwell cover ⇒ Rep. Gr. 68 .

Protected by copyright. Copying for private or commercial purposes, in part or in whole, is not permitted unless authorised by Volkswagen AG. Volkswagen AG does not guarantee or accept any liability with respect to the correctness of information in this document. Copyright by Volkswagen AG.
satelettronica

– Unclip trim panel for controls -1-.
– Remove trim or compartment -2-.

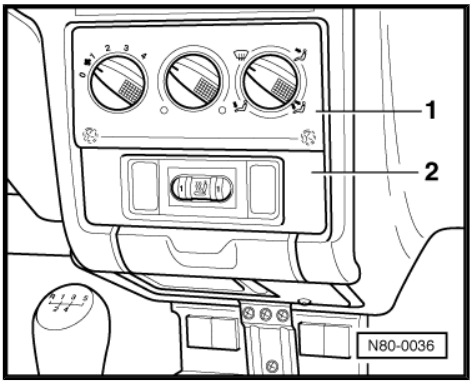

Note

For clarity, the following figure shows centre vent removed.

– Remove 3 bolts -arrows A-.
– Footwell vent, upper part -1- push into lower part of footwell vent -2- -arrow B-.
– Pull out footwell vent to left.

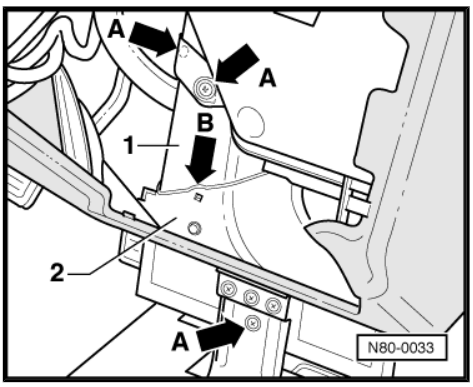

1.11 Removing and installing heater unit

Special tools and workshop equipment required

♦ Hose clamps up to 40 mm Ø -3093-

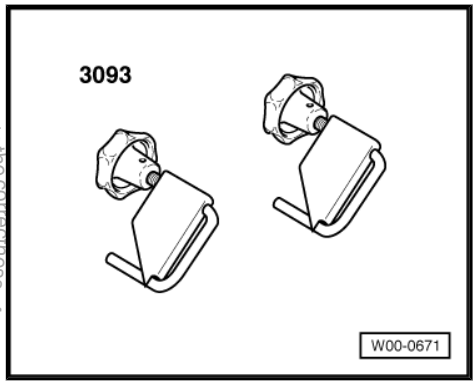

♦ Drip tray for workshop hoist -VAS 6208-

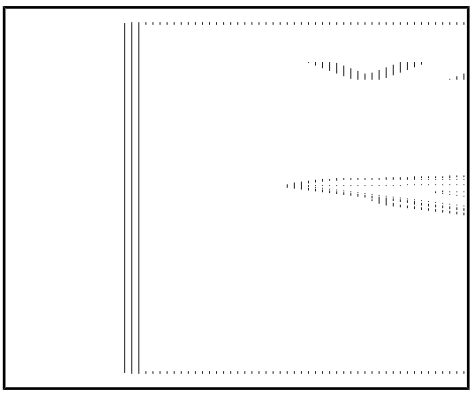

Protected by copyright. Copyright for private or commercial purposes, in part or in whole, is not permitted unless authorised by Volkswagen AG. Volkswagen AG does not guarantee or accept any liability with respect to the correctness of information in this document. Copyright by Volkswagen AG.

satelettronica

Note

To prevent coolant from entering interior of vehicle, seal heat exchanger connections before removing heater unit.

1.11.1 Removing

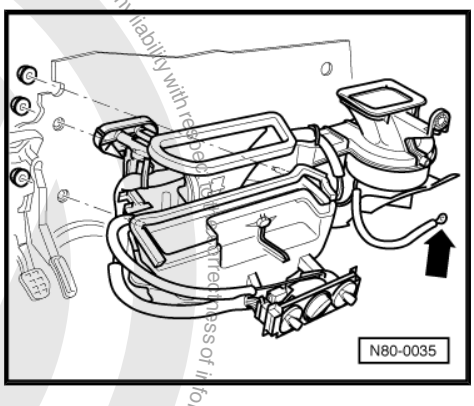

– Remove dash panel ⇒ Rep. Gr. 70 .
– Unbolt earth connection -arrow- on right A-pillar.
– Remove dust and pollen filter together with filter housing ⇒ page 26.
– Open expansion tank cap.

> **WARNING**
>
> *Danger of scalding injuries.*
>
> *The cooling system is pressurised. When the engine is warm, the coolant temperature may be above 100° C.*
>
> *If necessary, release pressure before carrying out repairs.*

– Place drip tray -VAS 6208- beneath engine.
– Clamp off coolant hoses near heat exchanger using hose clamps to 40 mm Ø -3093- so that no coolant can escape.
– Remove coolant hoses from heat exchanger.
– Place a compressed air pistol in heat exchanger connection and carefully blow out remaining coolant.
– Unscrew hexagon nuts from bulkhead in engine compartment.

1.11.2 Installing

Install in reverse order.

– Filling and bleeding cooling system ⇒ Rep. Gr. 19 .

1.12 Dismantling and assembling heater unit

Copyright by Volkswagen AG. Volkswagen AG does not guarantee or accept any liability with respect to the correctness of information in this document. Copyright by Volkswagen AG.
satelettronica

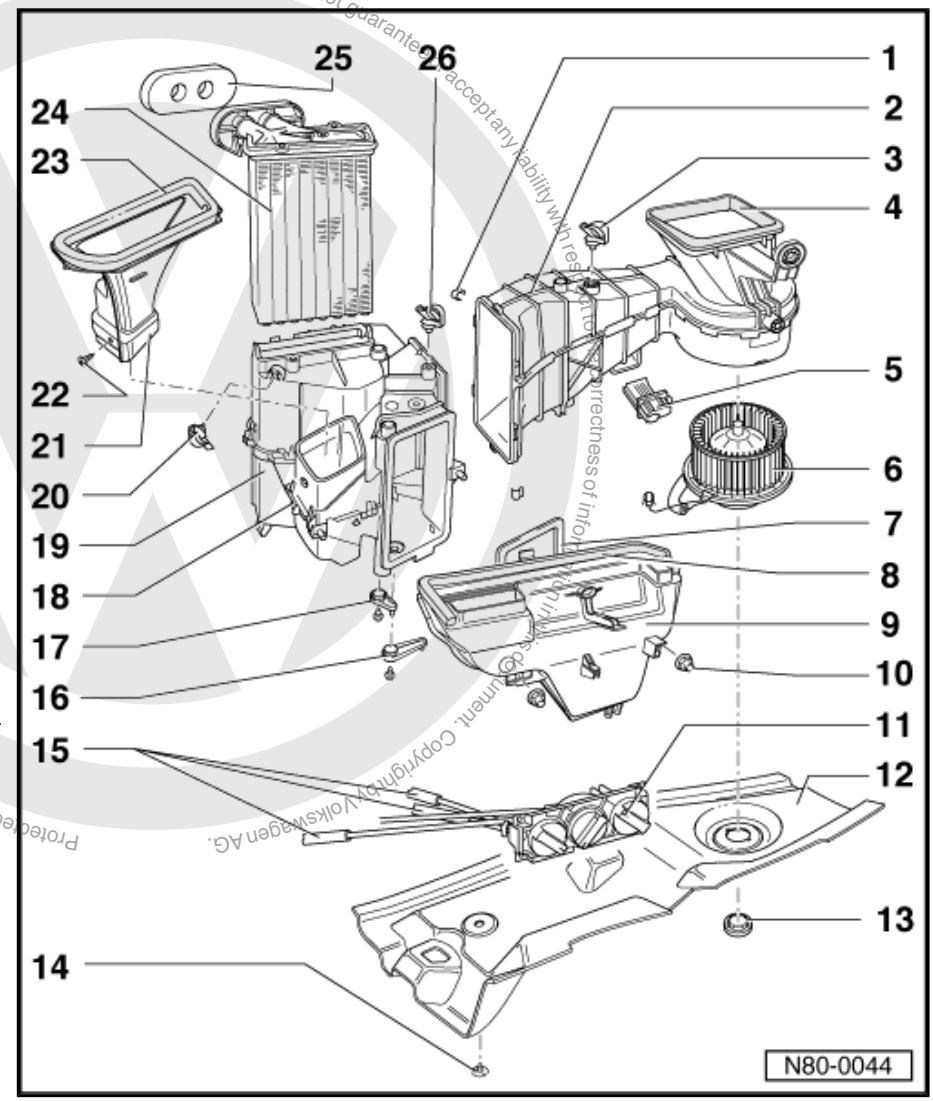

1 - Clip

2 - Air duct with main flap
- ❑ Do not dismantle further.

3 - Wiring clip

4 - Seal

5 - Fresh air blower series resistor with overheating fuse -N24-

6 - Fresh air blower -V2-

7 - Seal

8 - Seal
- ❑ Renew.

9 - Air distribution duct, lower part

10 - Hexagon nut

11 - Controls for fresh and heated air
- ❑ Dismantling and assembling ⇒ page 34 .

12 - Air duct cover

13 - Plug

14 - Clip

15 - Cables
- ❑ Renewing: first remove cover ⇒ Item 12 (page 31) .
- ❑ Installing and adjusting ⇒ page 32 .

16 - Temperature flap lever

17 - Central flap lever

18 - Footwell/defroster flap lever

19 - Air distribution housing
- ❑ With temperature flap.
- ❑ With central flap.
- ❑ With footwell/defroster flap.
- ❑ Do not dismantle further.

20 - Wiring clip

21 - Intermediate piece

22 - Self-tapping fillister head screw

23 - Seal
- ❑ Renew.

24 - Heat exchanger
- ❑ Seals must be bonded free of gaps all around.
- ❑ If retaining tabs do not engage when inserted, then bolt on heat exchanger.

25 - Seal
- ❑ Renew.

Protected by copyright. Copyright by Volkswagen AG. Volkswagen AG does not guarantee or accept any liability with respect to the correctness of information in this document. Copyright by Volkswagen AG. Unauthorised use or transfer to other parties is not permitted. Commercial use or transfer to other parties is not permitted.
satelettronica

26 - Wiring clip

1.13 Installing and adjusting cables

Note

- *First connect the cables to the removed controls then adjust and secure the cables to the levers on the heater.*
- *Place Bowden cable sheath against stops on controls and secure.*
- *Adjust cables at flap levers with controls installed.*
- *When control knobs are turned, all flaps must audibly contact stop.*

1 - Temperature flap cable

- ❑ From temperature control rotary knob to temperature flap.
- ❑ Blue sheath.
- ❑ Adjusting cable at temperature flap ⇒ page 33 .

2 - Footwell/defroster flap cable

- ❑ From air distribution control rotary knob to footwell/defroster flap.
- ❑ Black sheath.
- ❑ Adjust cable at footwell/defroster flap ⇒ page 33 .

3 - Central flap cable

- ❑ From air distribution rotary control to central flap.
- ❑ Yellow sheath.
- ❑ Adjusting cable at central flap ⇒ page 33 .

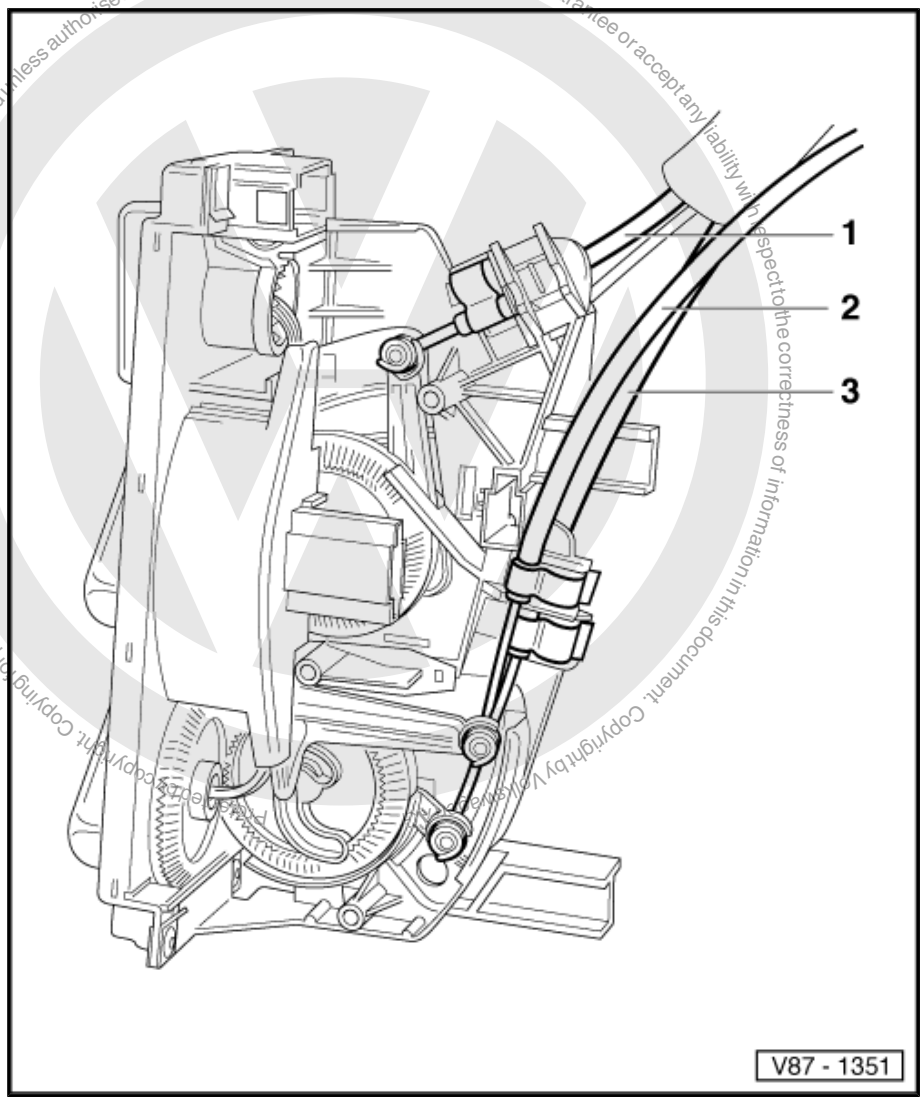

Copyright by Volkswagen AG. Volkswagen AG does not guarantee or accept any liability with respect to the correctness of information in this document. Copying for private or commercial purposes, in part or in whole, is not permitted unless authorised by Volkswagen AG.
satelettronica

1.13.1 Adjusting cable at temperature flap

Note

To adjust cable at lever of temperature flap, footwell vent must be removed ⇒ page 28 .

– Install controls for heated air and fresh air blower ⇒ page 25 .
– Turn temperature rotary knob to stop of “cold” position.
– Press temperature flap lever to stop -arrow- and secure blue cable sheath.

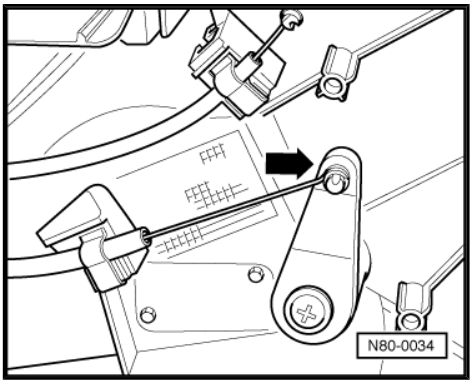

1.13.2 Adjusting cable at central flap

Note

To adjust cable at lever of central flap, footwell vent must be removed ⇒ page 28 .

– Install controls for heated air and fresh air blower ⇒ page 25 .
– Turn air distribution rotary knob to stop of Defrost position.
– Press central flap lever to stop -arrow- and secure yellow cable sheath.

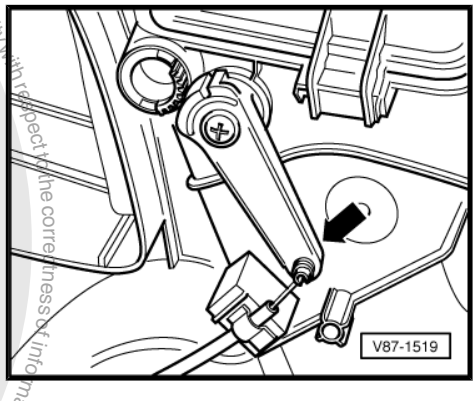

1.13.3 Adjusting cable at footwell/defroster flap

Note

To adjust cable at lever of footwell/defroster flap, driver side compartment must be removed.

– Remove driver side compartment ⇒ Rep. Gr. 68 .
– Install controls for heated air and fresh air blower ⇒ page 25 .

satelettronica

– Turn air distribution rotary knob to stop of Defrost position.
– Press footwell/defroster flap lever to stop -arrow- and secure black cable sheath.

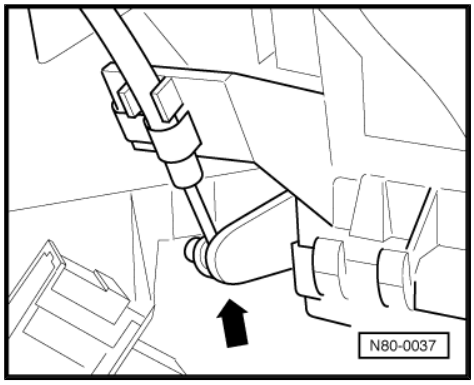

1.14 Dismantling and assembling heated air and fresh air controls

1 - Controls
- ❑ With fresh air blower switch -E9- .

2 - Light conductor

3 - Coloured filter

4 - Fresh air regulation light bulb -L16-

5 - Cap

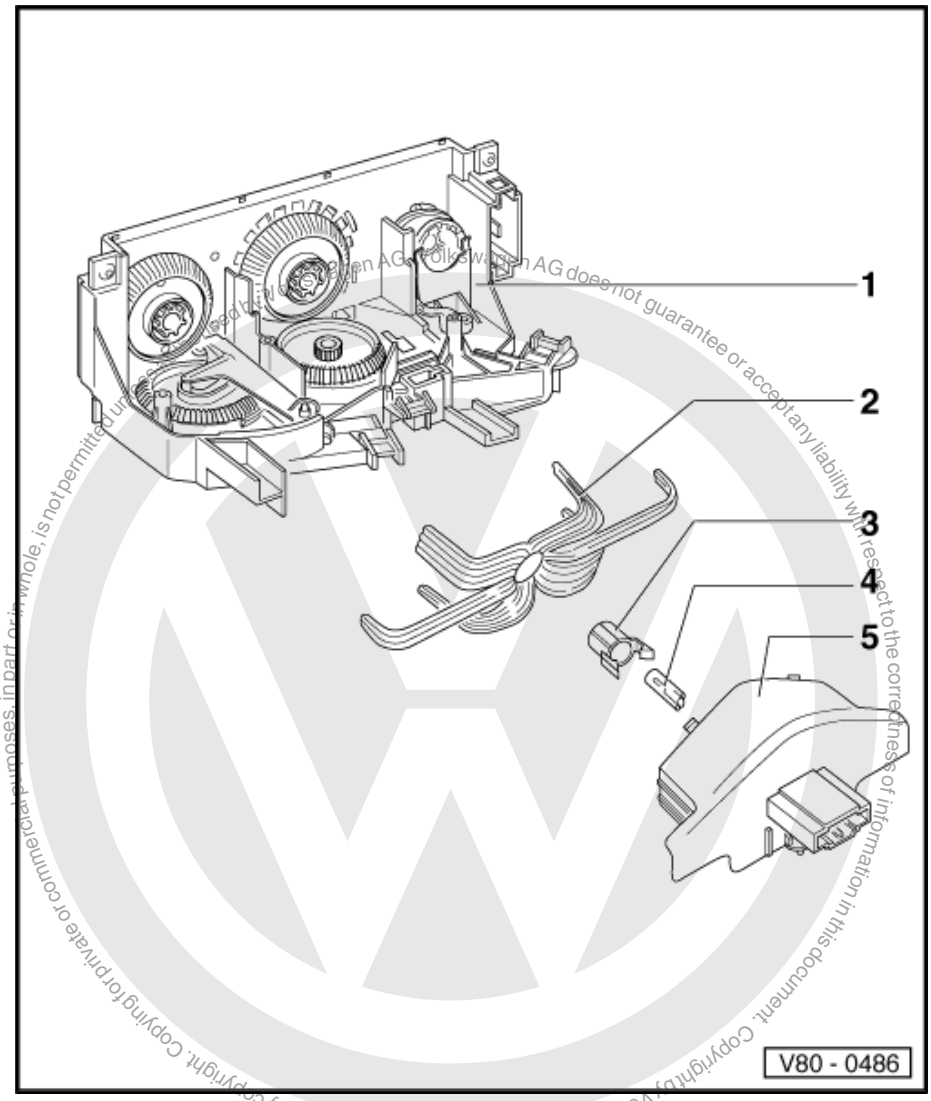

Protected by copyright. Copying for private or commercial purposes, in part or in whole, is not permitted unless authorised by Volkswagen AG. Volkswagen AG does not guarantee or accept any liability with respect to the correctness of information in this document. Copyright by Volkswagen AG.

satelettronica

2 Repairing heater, vehicles 10.99 ▸

2.1 Passenger compartment heating

2.1.1 Before beginning repair work, perform the following steps:

– Switch off all electrical consumers.
– Switch off ignition.
– Pull out ignition key.

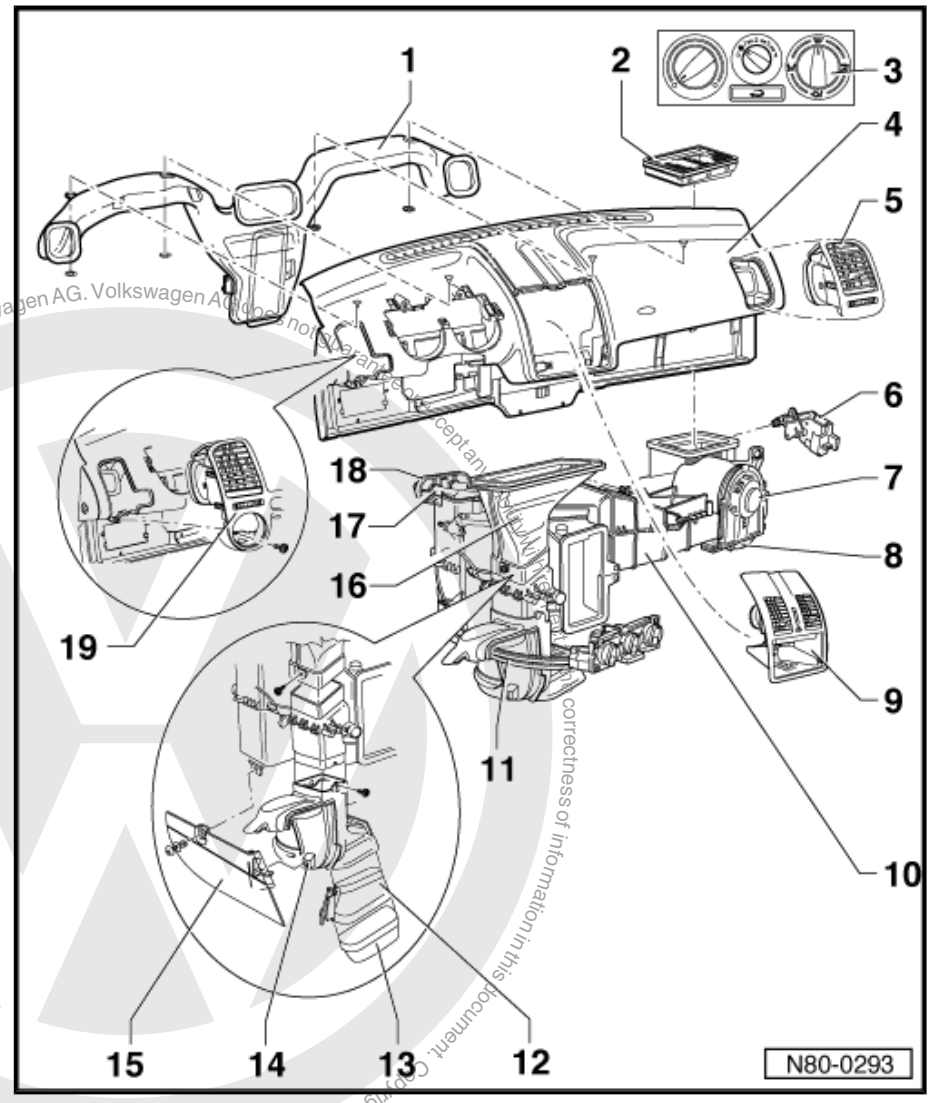

1 - Air duct

2 - Dust and pollen filter

- ❑ In plenum chamber.
- ❑ With active charcoal filter.
- ❑ Removing and installing ⇒ page 37 .

3 - Controls for fresh and heated air

- ❑ With fresh air blower switch -E9-
- ❑ With fresh air and air recirculation flap switch -E159- .
- ❑ Removing and installing ⇒ page 42 .
- ❑ Dismantling and assembling ⇒ page 48 .
- ❑ Installing and adjusting cables ⇒ page 49 .

4 - Dash panel

- ❑ Removing and installing ⇒ Rep. Gr. 70 .

5 - Vent on front passenger side

- ❑ Remove vent ⇒ page 39 .

6 - Fresh air and air recirculation flap control motor -V154-

- ❑ Removing and installing ⇒ page 47 .

7 - Fresh air blower -V2-

- ❑ Removing ⇒ page 36 .

8 - Fresh air blower series resistor with overheating fuse -N24-

- ❑ Removing ⇒ page 36 .

9 - Central vents

- ❑ Remove vent ⇒ page 38 .

10 - Heater unit

- ❑ Removing ⇒ page 44 .

satelettronica

11 - Cables

- ❑ Installing and adjusting ⇒ page 49 .

12 - Connecting piece

13 - Cover

14 - Footwell vent

- ❑ Remove vent ⇒ page 41 .

15 - Footwell system

16 - Intermediate piece, defrost

- ❑ To renew, remove and install dash panel ⇒ Rep. Gr. 70 .

17 - Heat exchanger

- ❑ To renew, remove dash panel ⇒ Rep. Gr. 70 .
- ❑ Installing ⇒ page 46 .
- ❑ After renewal, completely renew coolant.

18 - Heat exchanger/bulkhead seal

- ❑ Note installation position ⇒ page 47 .

19 - Vent on driver side

- ❑ Remove vent ⇒ page 40 .

2.2 Removing fresh air blower -V2-

1 - Heating

2 - Fresh air blower -V2-

3 - Fresh air blower series resistor with overheating fuse -N24-

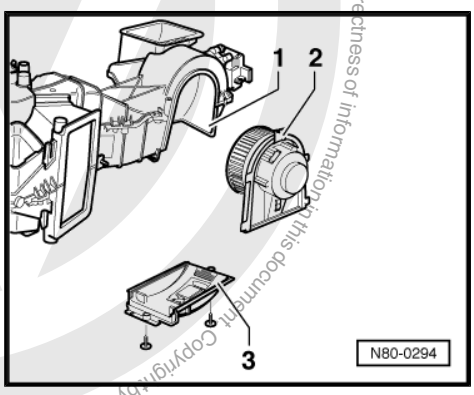

2.2.1 Removing

– Remove driver side footwell cover ⇒ Rep. Gr. 68 .

– Remove centre console ⇒ Rep. Gr. 68 .

– Remove glove box ⇒ Rep. Gr. 68 .

– Separate foam cover beneath heater unit.

– Pull connectors off fresh air blower -V2- -2-.

– Remove fresh air blower series resistor with overheating fuse -N24- -3-.

– Pull fresh air blower -V2- out downwards.

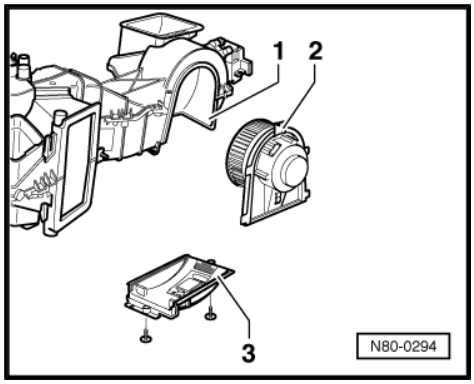

Protected by copyright. Copying for private or commercial purposes, in part or in whole, is not permitted unless authorised by Volkswagen AG. Volkswagen AG does not guarantee or accept any liability with respect to the correctness of information in this document. Copyright by Volkswagen AG.
satelettronica

2.3 Removing and installing dust and pollen filter

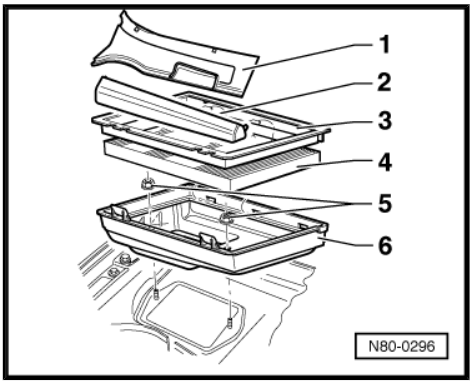

1 - Plenum chamber cover

2 - Cover

3 - Dust and pollen filter cover

4 - Dust and pollen filter

5 - Plastic nut, 2.5 Nm

6 - Filter housing

2.3.1 Removing

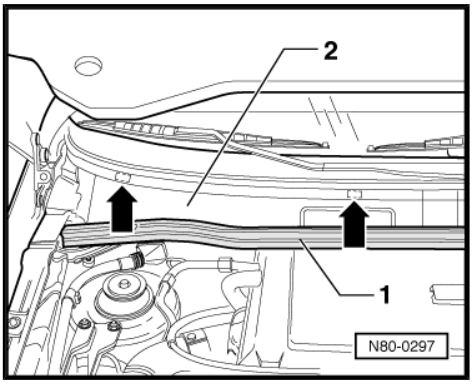

– Pull off rubber seal -1- on plenum chamber cover (right) upwards to centre of vehicle.

– Unclip two clips -arrows- beneath water deflector (rubber) and remove plenum chamber cover -2-.

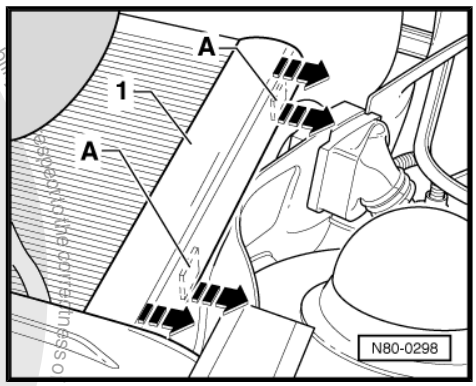

– Press out cover -1- in -direction of arrow- and press filter housing tabs -A- in -direction of arrow- and remove filter element with frame upwards.

– Remove filter element from frame.

2.3.2 Installing

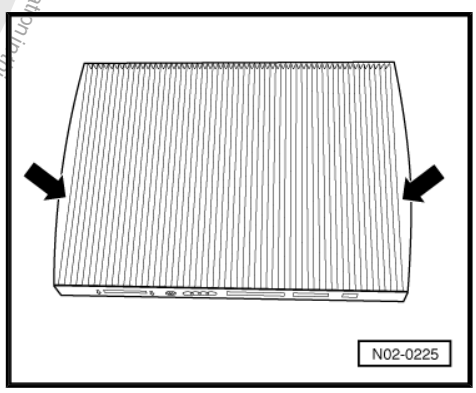

– Insert left and right edges of frame into first rib -arrows- of new filter element.

Protected by copyright. Copying for private or commercial purposes, in part or in whole, is not permitted unless authorised by Volkswagen AG. Volkswagen AG does not guarantee or accept any liability with respect to the correctness of information in this document. Copyright by Volkswagen AG.
satelettronica

– Insert frame into housing with lug -1- in corresponding recesses and press frame and filter element downwards.

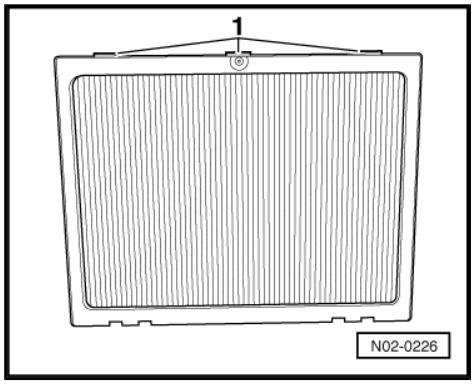

– Install plenum chamber cover -2- and secure beneath water deflector with two clips -arrows-.
– Press on rubber seal -1-.

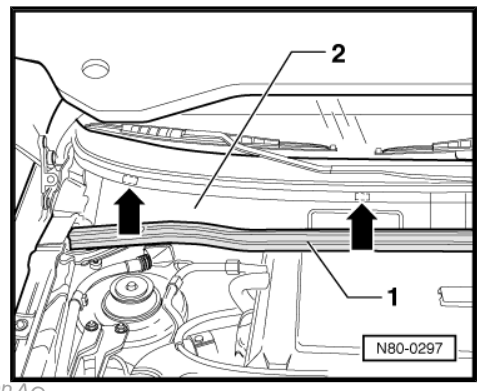

2.4 Removing centre vents

2.4.1 Removing

– Remove radio -1- ⇒ Rep. Gr. 91 .
– Remove compartment -2-.

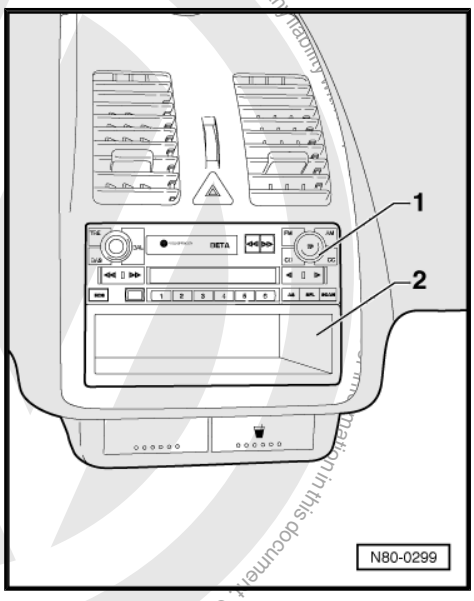

Protected by copyright. Copying for private or commercial purposes, in part or in whole, is not permitted unless authorised by Volkswagen AG. Volkswagen AG does not guarantee or accept any liability with respect to the correctness of information in this document. Copyright by Volkswagen AG.
satelettronica

– Remove bolts -arrows A-.
– Lever retaining tabs -arrows B- upwards.

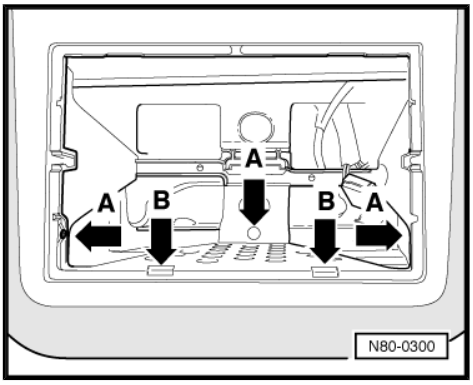

– Pull centre vents out at the bottom and remove at the same time.
– Separate connectors to hazard warning light switch -E3- .

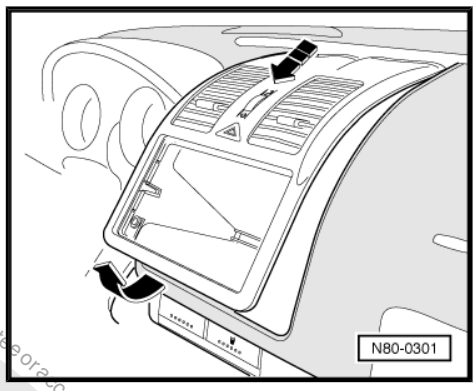

2.5 Removing and installing vent on front passenger side

2.5.1 Removing

– Unclip vents with a screwdriver and pad -arrows-.
– Pull out vent.

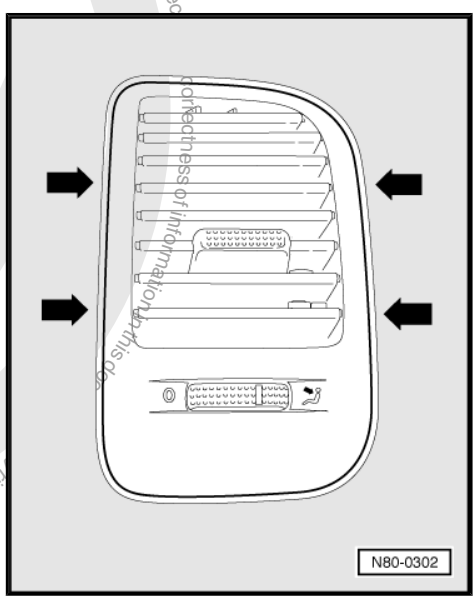

2.5.2 Installing

– Press vent in lightly until it locates.

Protected by copyright. Copying for private or commercial purposes, in part or on whole, is not permitted unless authorised by Volkswagen AG. Volkswagen AG does not guarantee or accept any liability with respect to the correctness of information in this document. Copyright by Volkswagen AG.
satelettronica

Protected by copyright. Copying for private or commercial purposes, in part or in whole, is not permitted unless authorised by Volkswagen AG. Volkswagen AG does not guarantee or accept any liability with respect to the correctness of information in this document. Copyright by Volkswagen AG.

2.6 Removing and installing vent on driver side

2.6.1 Removing

– Remove light switch -E1- -1- ⇒ Rep. Gr. 96 .

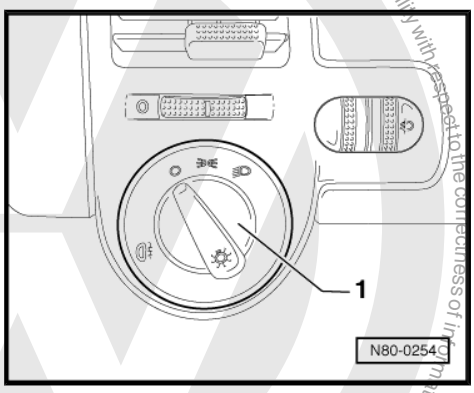

– Remove bolt -arrow-.

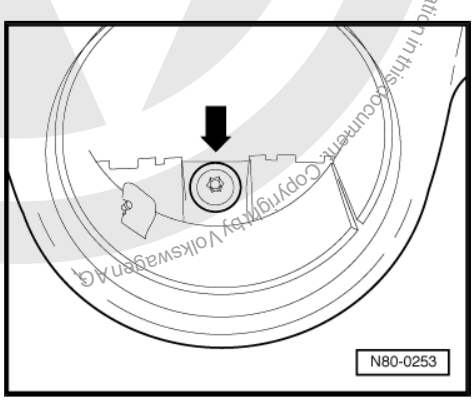

– Unclip vents with a screwdriver and pad -arrows-.
– Pull off connector for headlight range control.
– Pull out vent.

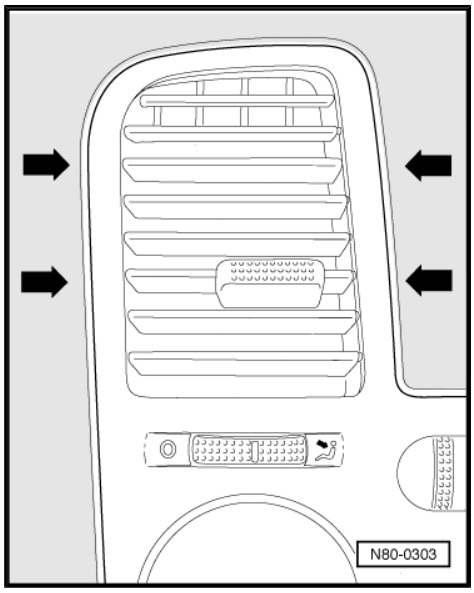

2.6.2 Installing

– Press in until vent engages.

satelettronica

2.7 Removing footwell vent

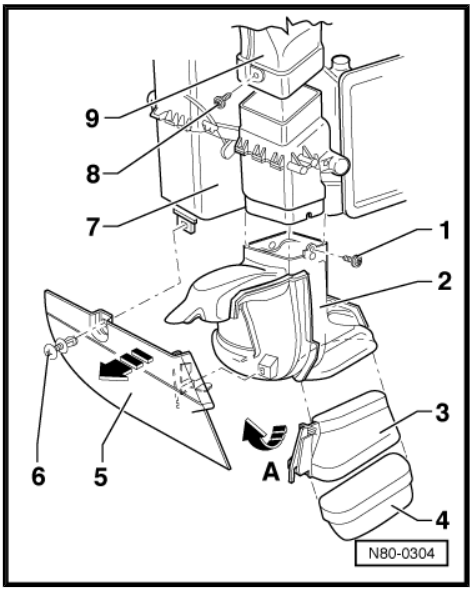

1 - Bolt
2 - Footwell vent
3 - Connecting piece
4 - Cover
5 - Footwell system
6 - Spreader rivet
7 - Heater unit
8 - Bolt
9 - Intermediate piece, defrost

2.7.1 Removing

– Remove driver side footwell cover ⇒ Rep. Gr. 68 .
– Remove centre console ⇒ Rep. Gr. 68 .
– Remove glove box ⇒ Rep. Gr. 68 .
– Remove screw -1-.
– Pull out footwell vent -2- towards driver side footwell -arrow A-.

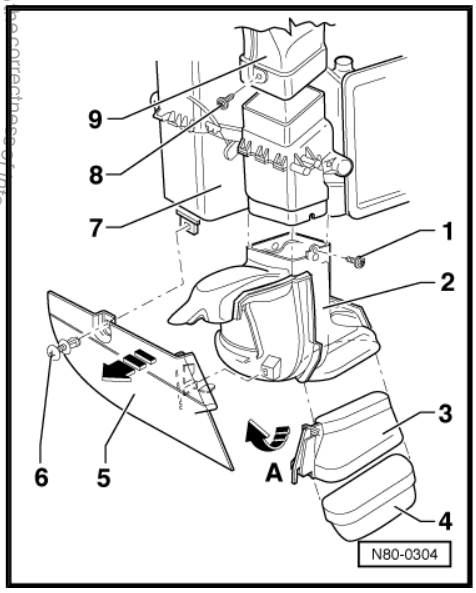

Protected by copyright. Copying for private or commercial purposes, in part or in whole, is not permitted unless authorised by Volkswagen AG. Volkswagen AG does not guarantee or accept any liability with respect to the correctness of information in this document. Copyright by Volkswagen AG.
satelettronica

2.8 Removing and installing controls for fresh and heated air

2.8.1 Removing

– Press downwards with finger tips in compartment -1-.

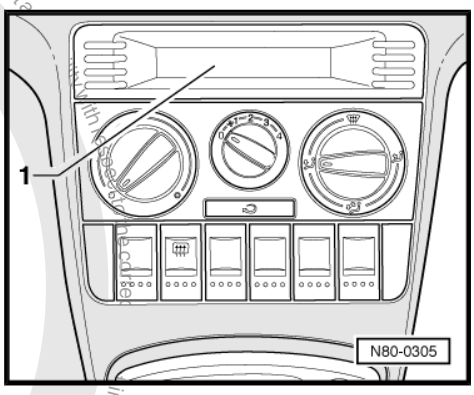

– Pull trim off controls -arrows-.

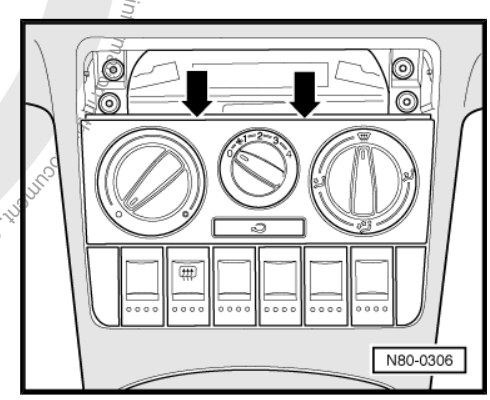

– Remove bolts -arrows-.
– Remove driver side footwell cover ⇒ Rep. Gr. 68 .
– Remove centre console ⇒ Rep. Gr. 68 .

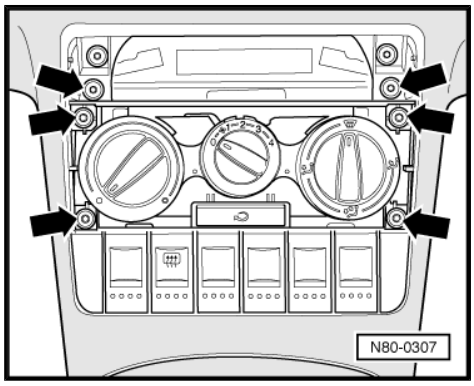

– Release cables on controls -arrows-.
– Pull off connectors -1- and -2-.

As soon as controls have been removed, check function of cables for heated air and fresh air.

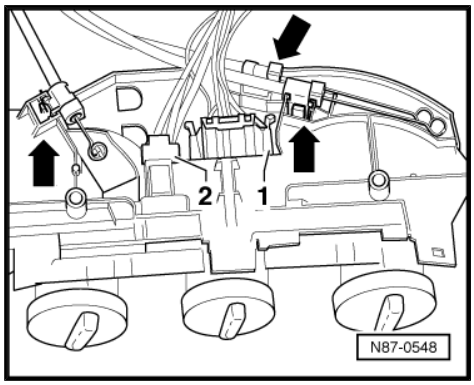

Protected by copyright. Copying for private or commercial purposes, in part or in whole, is not permitted unless authorised by Volkswagen AG. Volkswagen AG does not guarantee or accept any liability with respect to the correctness of information in this document. Copyright by Volkswagen AG.
satelettronica

– To do this, move wire ends of cables back and forth in direction of arrow.

– Replace damaged or stiff cables.

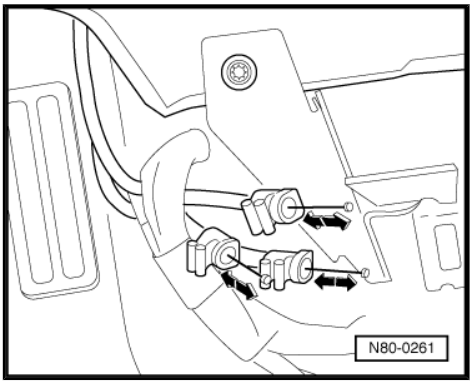

2.8.2 Installing

Note

- *The cable sheaths are colour coded.*
- *Check cables before installing; replace stiff or damaged cables.*
- *When control knobs are turned, all flaps must audibly contact stop.*

– Bend wire ends of cables -1- and press onto lever of control -2- -arrow-.

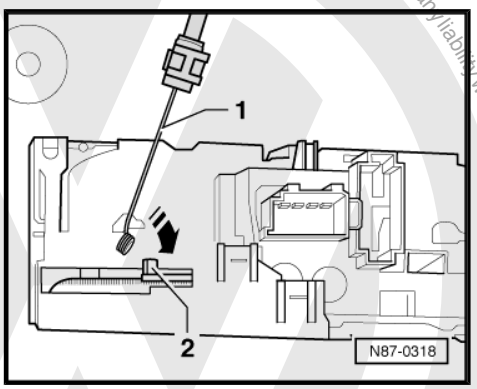

– Press cable for footwell/defroster flap, cable for temperature flap and cable for central flap -1- into locking device -2- until it engages.

Identification of footwell/defroster flap cable: left-hand drive: green; right-hand drive: black.

Identification of central flap cable: left-hand drive: yellow; right-hand drive: grey.

Identification of temperature flap cable: red left-hand drive: beige; right-hand drive: white.

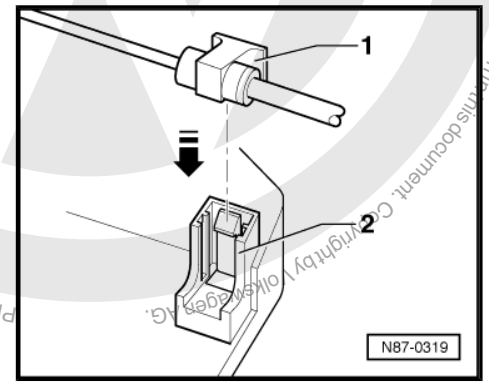

Protected by copyright. Copying for private or commercial purposes, in part or in whole, is not permitted unless authorised by Volkswagen AG. Volkswagen AG does not guarantee or accept any liability with respect to the correctness of information in this document. Copyright by Volkswagen AG.
satelettronica

2.9 Checking ventilation

Note

- *The stale air escapes via ventilation openings in the luggage compartment trim.*
- *If the ventilation is to function properly, the ventilation openings must not be covered.*
- *The ventilation vents are located in the side panel under the bumper.*

2.9.1 Checking

– The sealing lips -1- in the ventilation frame -2- must move freely and close by themselves.

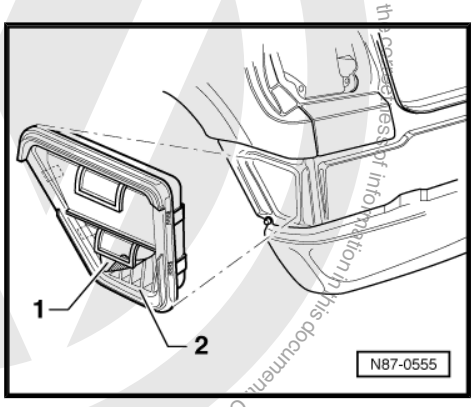

2.10 Removing and installing heater unit

Special tools and workshop equipment required

- Drip tray for workshop hoist -VAS 6208-

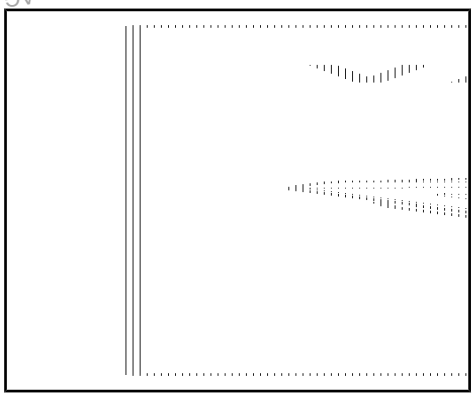

- Hose clamps up to 40 mm Ø -3093-

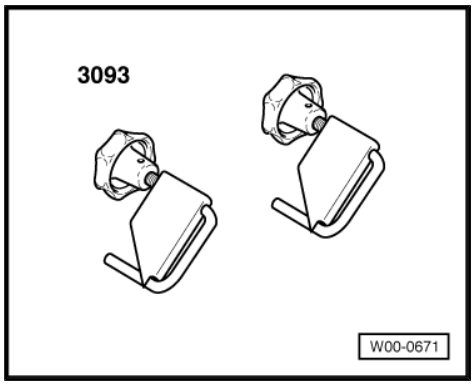

Protected by copyright. Copying for private or commercial purposes, in part or in whole, is not permitted unless authorised by Volkswagen AG. Volkswagen AG does not guarantee or accept any liability with respect to the correctness of information in this document. Copyright by Volkswagen AG.
satelettronica

Reproduced by Volkswagen AG. Volkswagen AG does not guarantee or accept any liability with respect to the correctness of information in this document. Copyright by Volkswagen AG. Not for commercial purposes, in part or in whole, not permitted unless authorised by Volkswagen AG.

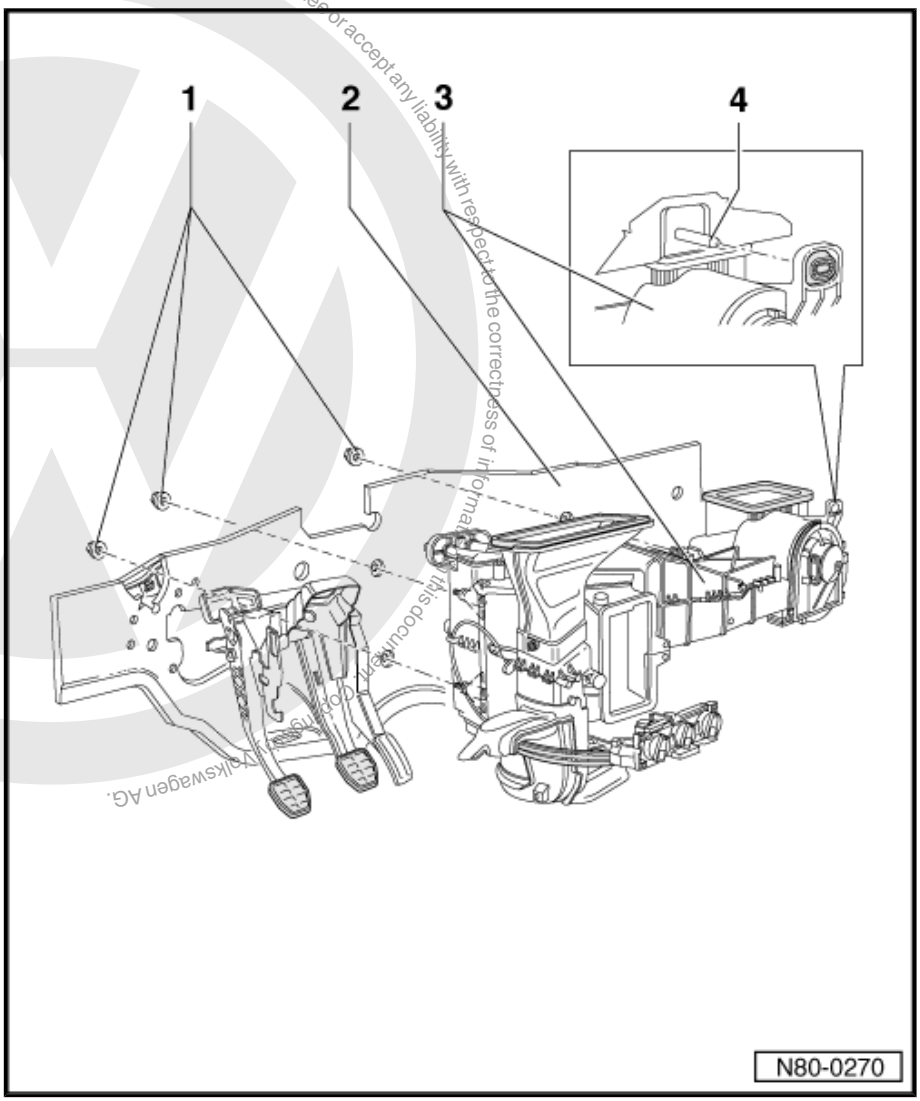

1 - Hexagon nut

- ❑ In engine compartment.
- ❑ Qty. 3
- ❑ 4 Nm.

2 - Bulkhead

3 - Heater unit

Removing

– Remove dash panel ⇒ Rep. Gr. 70 .

– Place drip tray -VAS 6208- beneath engine.

> ⚠ **WARNING**
>
> ***Danger of scalding injuries.***
>
> ***The cooling system is pressurised. When the engine is warm, the coolant temperature may be above 100° C.***
>
> ***If necessary, release pressure before carrying out repairs.***

– Clamp off coolant hoses in engine compartment using hose clamps up to 40 mm Ø -3093- and remove from heat exchanger.

– Place a compressed air pistol in heat exchanger connection and carefully blow out remaining coolant.

– Remove hexagon nut ⇒ Item 1 (page 45) .

Installing

– Guide heater unit to bulkhead and push studs through intended holes.

– At the same time, make sure that heater unit sits on guide pin ⇒ Item 4 (page 45) against stop.

– Screw hexagon nuts ⇒ Item 1 (page 45) onto bulkhead in engine compartment and tighten them.

– Check coolant level and top up ⇒ Rep. Gr. 19 .

❑ Dismantling and assembling heater unit ⇒ page 46 .

4 - Guide pin

satelettronica

2.11 Dismantling and assembling heater unit

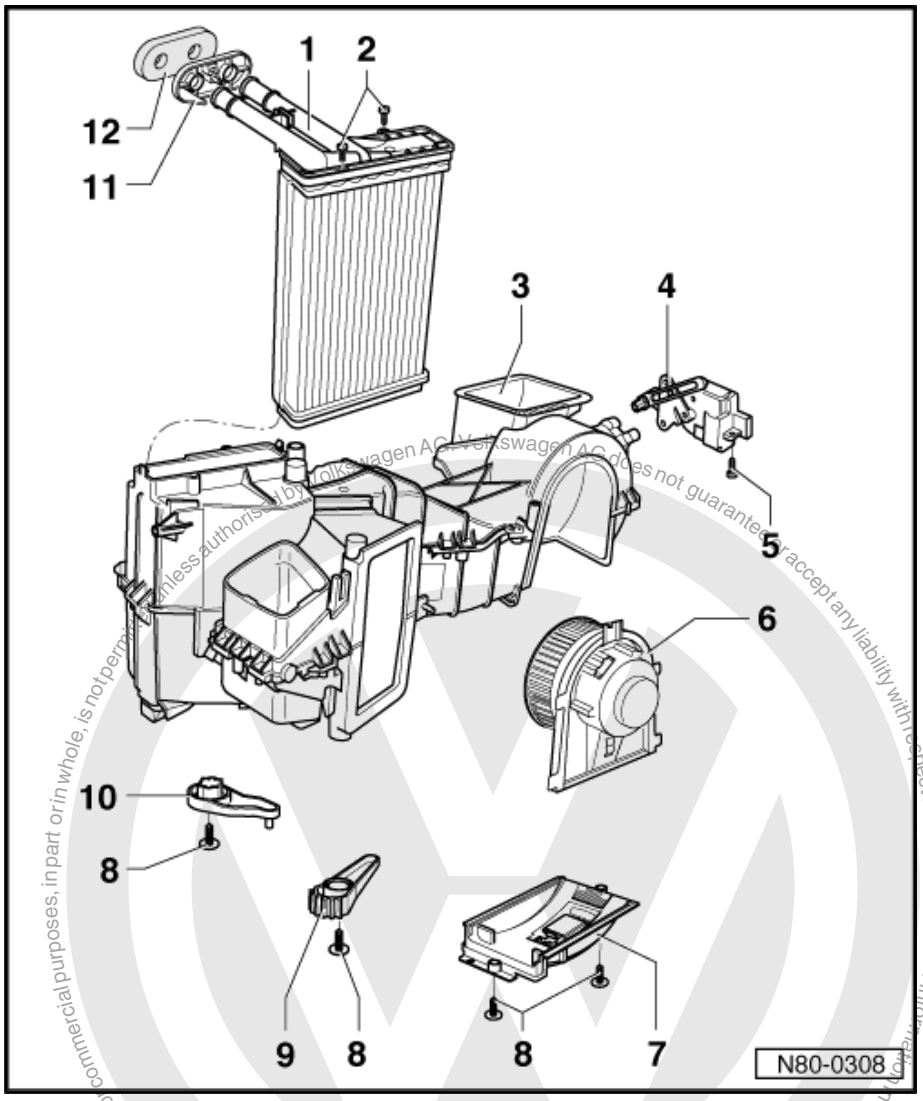

1 - Heat exchanger

- ❑ To renew: remove heater unit ⇒ page 44 .
- ❑ After removal, completely renew coolant.

2 - Self-tapping fillister head screw

3 - Air distribution housing

- ❑ Do not dismantle further.

4 - Fresh air and air recirculation flap control motor -V154-

- ❑ Installing ⇒ page 47 .

5 - Self-tapping fillister head screw

6 - Fresh air blower -V2-

- ❑ Removing ⇒ page 36 .

7 - Fresh air blower series resistor with overheating fuse -N24-

- ❑ Removing ⇒ page 36 .

8 - Self-tapping fillister head screw

9 - Central flap lever

- ❑ Installing and adjusting ⇒ page 46 .

10 - Temperature flap lever

- ❑ Observe correct spare part number.

11 - Base plate

12 - Heat exchanger/bulkhead seal

- ❑ Note installation position ⇒ page 47 .

2.12 Installing and adjusting lever for central flap

– The central flap pinion has an adjustment mark. Fit lever so that adjustment markings on lever and pinion align -arrows-.

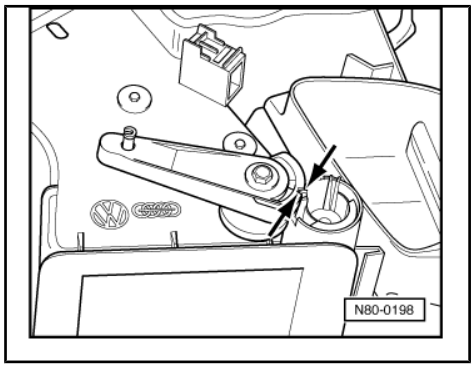

Protected by copyright. Copying for private or commercial purposes, in part or in whole, is not permitted unless authorised by Volkswagen AG. Volkswagen AG does not guarantee or accept any liability with respect to the correctness of information in this document. Copyright by Volkswagen AG.
satelettronica

2.13 Installation position of seal for heat exchanger and bulkhead

The seal between the heat exchanger and the bulkhead has an adjustment mark.

– Fit seal -1- so that adjustment mark on seal and mark on base plate -2- align -3-.

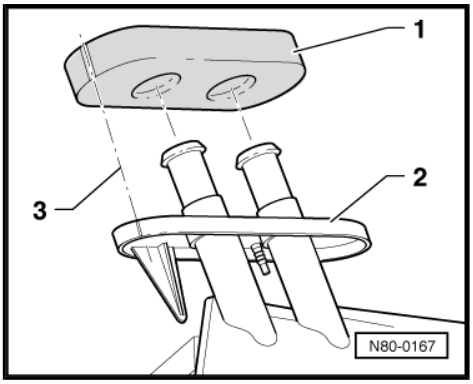

2.14 Removing and installing fresh air and air recirculation flap control motor -V154-

2.14.1 Removing

– Remove dash panel ⇒ Rep. Gr. 70 .

Note

- *A new control motor is supplied in the "Air recirculation" end position.*
- *The control motor is easier to install in the centre position.*

To move the control motor to the centre position, proceed as follows:

– Attach voltage supply connector -1- to control motor.

– Switch on ignition.

– Press fresh air and air recirculation button.

When centre position has been reached

– Pull voltage supply connector off control motor.

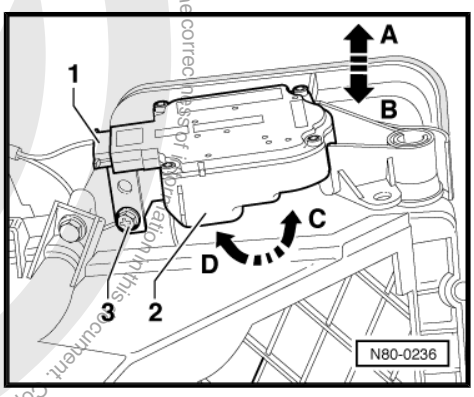

Protected by copyright. Copying for private or commercial purposes, in part or in whole, is not permitted unless authorised by Volkswagen AG. Volkswagen AG does not guarantee or accept any liability with respect to the correctness of information in this document. Copyright by Volkswagen AG.
satelettronica

2.14.2 Installing

– Place control motor -2- on fresh air and air recirculation flap lever -arrow B-.

The fresh air and air recirculation flap lever must be moved by hand depending on the position of the control motor. To do so, remove fresh air blower -V2- ⇒ page 36 .

– Turn control motor -2- in direction of -arrow D-.

– Fit securing bolt -3-.

– Connect voltage supply connector.

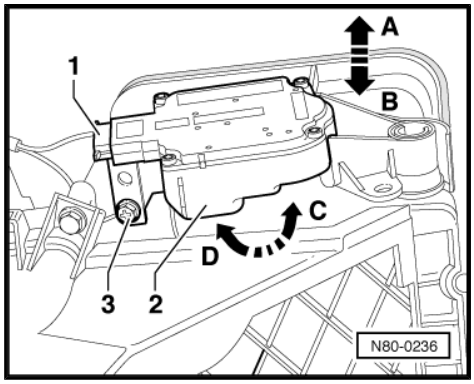

2.15 Dismantling and assembling heated air and fresh air controls

1 - Controls

- ❑ With fresh air blower switch -E9- and fresh air and air recirculation flap switch -E159- .

2 - Light conductor

3 - Coloured filter

4 - Trim

5 - Fresh air regulation light bulb -L16-

6 - Rotary knob

- ❑ For blower speed.
- ❑ To remove: use pliers with suitable plastic or rubber protection on jaws.

7 - Rotary knob

- ❑ For air distribution.
- ❑ To remove: use pliers with suitable plastic or rubber protection on jaws.

8 - Trim

9 - Rotary knob

- ❑ For inside temperature.
- ❑ To remove: use pliers with suitable plastic or rubber protection on jaws.

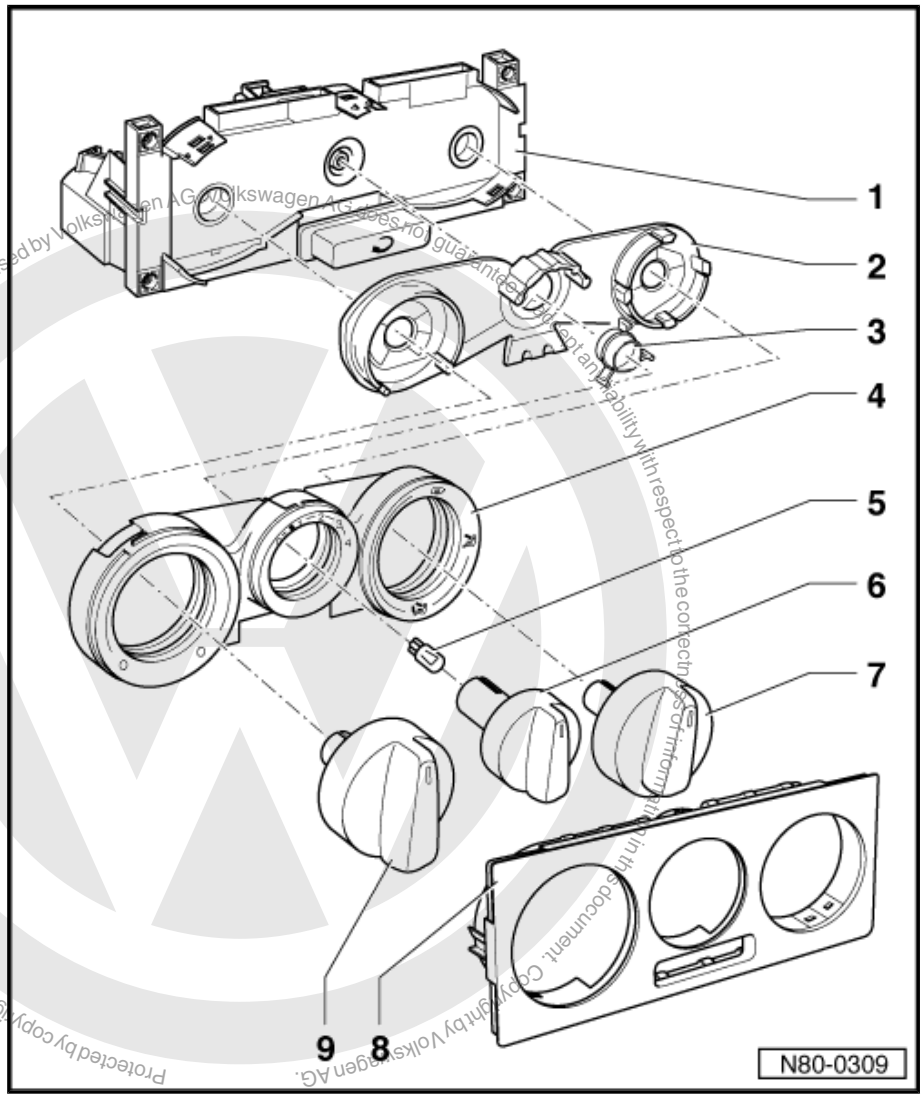

Protected by copyright. Copying for private or commercial purposes, part or in whole, is not permitted unless authorised by Volkswagen AG. Volkswagen AG does not guarantee or accept any liability with respect to the correctness of information in this document. Copyright by Volkswagen AG.

satelettronica

2.16 Installing and adjusting cables

Note

- *Attach cables to removed controls first and then attach cables to heater levers.*
- *The cable sheaths are colour coded.*
- *Check cables before installing; replace stiff or damaged cables.*
- *When control knobs are turned, all flaps must audibly contact stop.*

1 - Central flap cable

- ❑ From air distribution rotary control to central flap.
- ❑ Identification of cable sleeve: left-hand drive: yellow; right-hand drive: grey.
- ❑ Adjusting cable at central flap ⇒ page 50 .

2 - Footwell/defroster flap cable

- ❑ From air distribution control rotary knob to footwell/defroster flap.
- ❑ Identification of cable sleeve: left-hand drive: green; right-hand drive: black.
- ❑ Adjust cable at footwell/defroster flap ⇒ page 50 .

3 - Controls for fresh and heated air

- ❑ Removing and installing ⇒ page 42 .

4 - Temperature flap cable

- ❑ From temperature control rotary knob to temperature flap.
- ❑ Identification of cable sleeve: left-hand drive: beige; right-hand drive: white.
- ❑ Adjusting cable at temperature flap ⇒ page 49 .

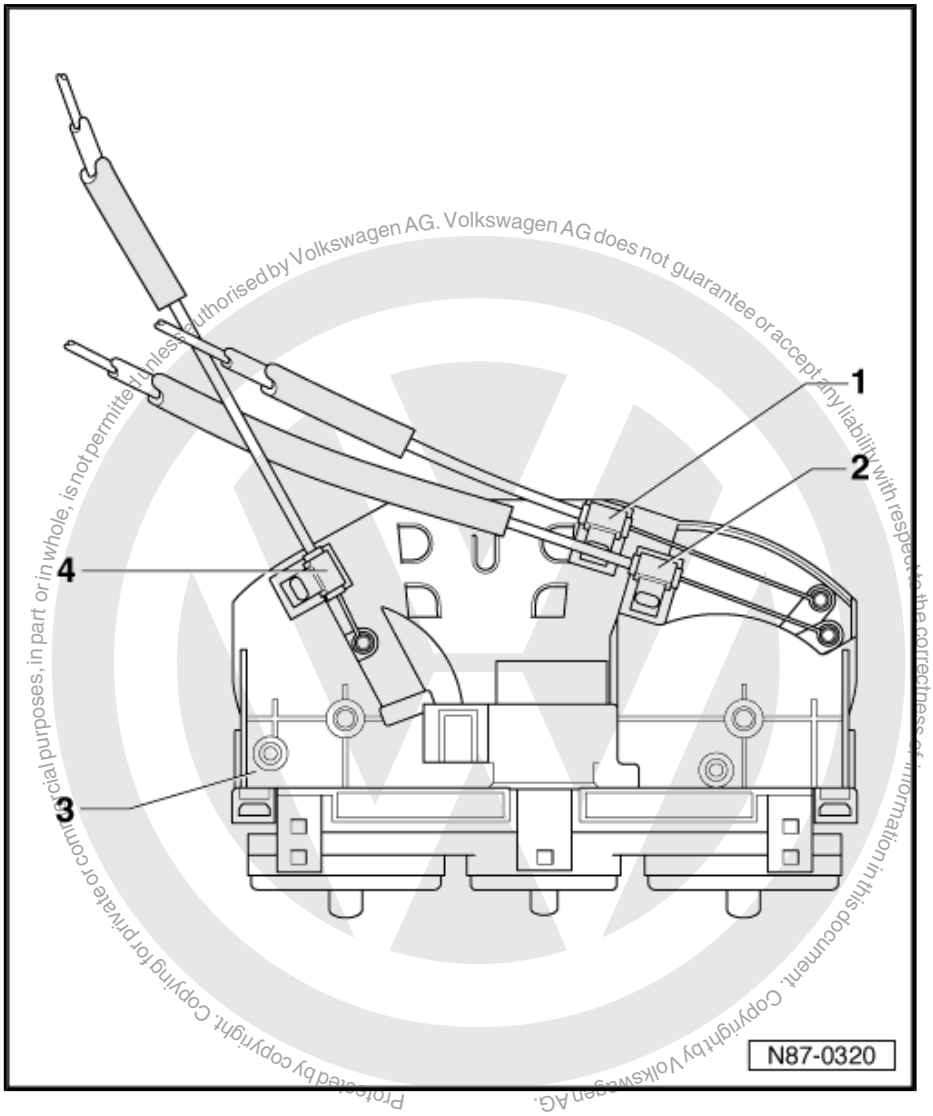

Protected by copyright. Copying for private or commercial purposes, in part or in whole, is not permitted unless authorised by Volkswagen AG. Volkswagen AG does not guarantee or accept any liability with respect to the correctness of information in this document. Copyright by Volkswagen AG.
satelettronica

2.16.1 Adjusting cable at temperature flap

Prerequisite:

- Heated air and fresh air blower controls are installed.

Protected by copyright. Copying for private or commercial purposes, in part or in whole, is not permitted unless authorised by Volkswagen AG. Volkswagen AG does not guarantee or accept any liability with respect to the correctness of information in this document. Copyright by Volkswagen AG.

Adjusting

– Turn temperature rotary knob to left to stop.

– Attach wire end of cable -1- to temperature flap lever -2-.

– Push on temperature flap lever -2- to stop -arrow A- and secure cable sheath -1- with clip -3-.

– Turn temperature rotary knob left and right to stops.

When turning the control knob, both end stops must be reached.

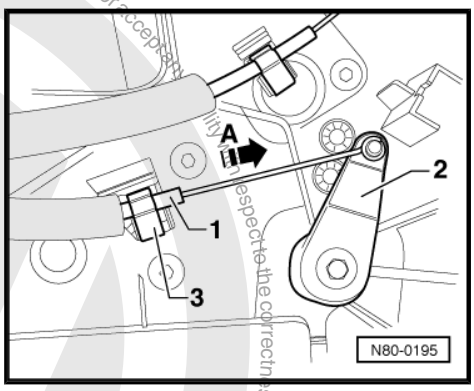

2.16.2 Adjusting cable at footwell/defroster flap

Prerequisite:

- Heated air and fresh air blower controls are installed.

Adjusting:

– Turn air distribution rotary knob to left to stop.

– Attach wire end of cable -1- to footwell/defroster flap lever -3-, -arrow A-.

– Push footwell/defroster flap lever to stop -arrow C- and attach cable sheath -1- with clip -2-, -arrow B-.

– Turn air distribution rotary knob left and right to stops.

When turning the control knob, both end stops must be reached.

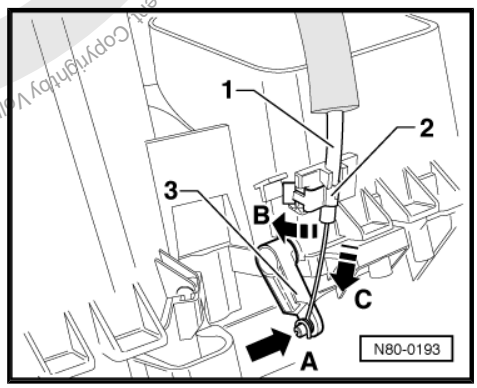

2.16.3 Adjusting cable at central flap

Prerequisites:

- The central flap lever is correctly adjusted ⇒ page 46 .
- Heated air and fresh air blower controls are installed.

Adjusting

– Turn air distribution rotary knob to left to stop.

– Attach wire end of cable -2- to central flap lever -1-.

– Push central flap lever to stop -arrow A- and attach cable sheath -2- with clip -3-.

– Turn air distribution rotary knob left and right to stops.

When turning the control knob, both end stops must be reached.

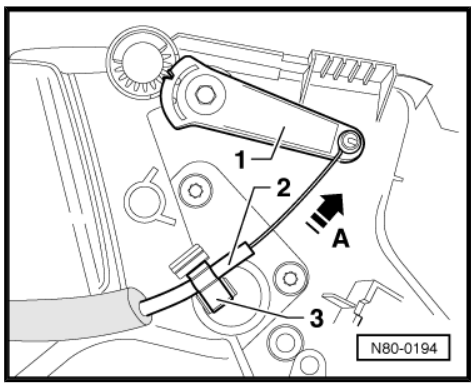

satelettronica

87 – Air conditioning system

1 Notes on repair work to vehicles with air conditioning and on handling refrigerant

Notes on repair work to vehicles with air conditioning and on handling refrigerant can be found in ELSA under repair group ⇒ Rep. Gr. 00 Technical information “Air conditioning system - with refrigerant R134a VW”.

The version in ELSA under the Internet button is no longer valid.

Additional information:

- ⇒ Current flow diagrams, Electrical fault finding and Fitting locations
- Repairs to evacuated refrigerant circuit that can only be carried out by specially trained mechanics at specialist service stations ⇒ Service Organisation Handbook (SOH) Volume 1a; Chapter 6.4 Workshop Equipment; Tools .

Protected by copyright. Copying or distribution of this document is not permitted unless authorised by Volkswagen AG. Volkswagen AG does not guarantee or accept any liability with respect to the correctness of information in this document. Copyright by Volkswagen AG.
satelettronica

2 Air conditioning system with manual controls, vehicles ▸ 09.99

2.1 Repairing air conditioning and heating - passenger compartment

Note

Parts marked "" can be repaired only in workshops with suitable equipment and specially trained mechanics because the refrigerant must be evacuated beforehand using, for example, the air conditioning service station -VAS 6007A- .*

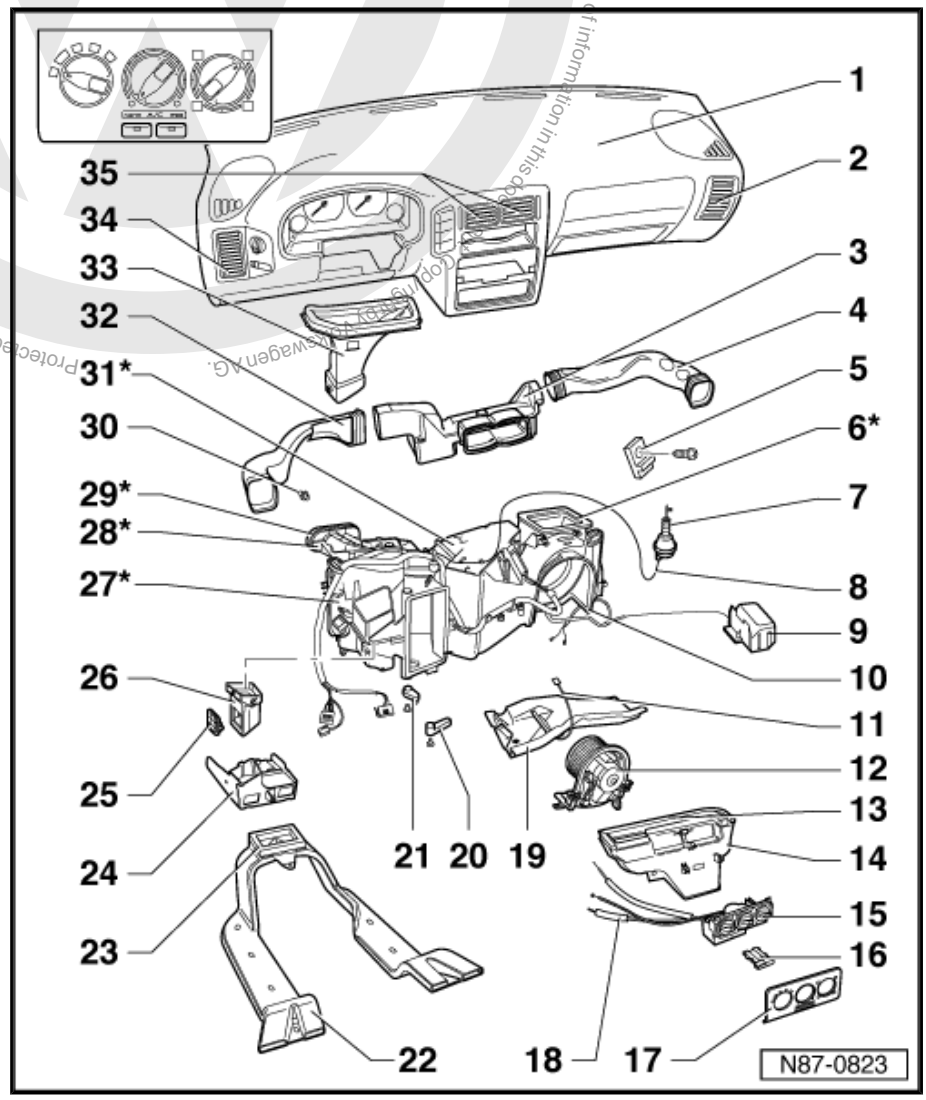

1 - Dash panel

- ❑ Removing and installing ⇒ Rep. Gr. 70 .

2 - Right vent

- ❑ Removing ⇒ page 27 .
- ❑ Do not dismantle further (vent and adjustable louver are one spare part).

3 - Air distribution duct, upper part

- ❑ To renew: remove centre vent ⇒ Item 35 (page 54) and remove lower part of air distribution duct ⇒ Item 24 (page 53) .

4 - Right air duct

- ❑ Removing and installing: first remove glove box ⇒ Rep. Gr. 68 or front passenger side airbag unit ⇒ Rep. Gr. 96 .

5 - Fresh air blower series resistor with overheating fuse -N24-

- ❑ Renewing ⇒ page 55 .

6 - Air intake duct*

- ❑ With fresh air and air recirculation flap.

7 - Vacuum unit for fresh air and air recirculation flap

- ❑ Ventilated: fresh air operation.
- ❑ Removing and installing ⇒ page 55 .

8 - Vacuum line

- ❑ Vacuum hose connection diagram ⇒ page 63 .

9 - Temperature switch for evaporator -E33-

- ❑ Only on "Fix" air conditioner compressor (non-regulating).

satelettronica

- ❑ Behind cover ⇒ Item 19 (page 53) .
- ❑ Insertion depth of sensor tube: 330 mm.
- ❑ Renewing ⇒ page 55 .
- ❑ Task: prevents icing up.
- ❑ Switching temperature: opens at or below -2° C.

10 - Seal

- ❑ Renew.

11 - Tensioning strap

- ❑ Removing and installing: first remove glove box ⇒ Rep. Gr. 68 or front passenger side airbag unit ⇒ Rep. Gr. 96 .

12 - Fresh air blower -V2-

- ❑ Removing and installing ⇒ page 24 .

13 - Seal

- ❑ Renew.

14 - Air distribution duct, lower part

- ❑ Renewing: remove centre vent ⇒ Item 35 (page 54) .
- ❑ Renewing upper part of air distribution duct: remove centre vent ⇒ Item 35 (page 54) and lower part of air distribution duct.

15 - Controls for fresh and heated air

- ❑ Installing and adjusting cables ⇒ page 70 .
- ❑ Removing and installing ⇒ page 25 .
- ❑ Dismantling and assembling ⇒ page 34 .

16 - Air conditioning system switch -E30-

- ❑ With fresh air and air recirculation flap switch -E159- .
- ❑ With air conditioning system switch illumination bulb -L43- .
- ❑ Removing ⇒ page 54 .

17 - Trim panel for controls

18 - Cables

- ❑ Renewing: first remove centre vent ⇒ Item 35 (page 54) , footwell vents ⇒ Item 24 (page 53) and front passenger side compartment
- ❑ Installing and adjusting ⇒ page 70 .

19 - Evaporator housing cover

- ❑ Removing and installing: first remove glove box ⇒ Rep. Gr. 68 or front passenger side airbag unit ⇒ Rep. Gr. 96 .

20 - Central flap lever

- ❑ Removing and installing: first remove footwell vents ⇒ Item 24 (page 53) and ⇒ Item 26 (page 53) .

21 - Temperature flap lever

- ❑ Removing and installing: first remove footwell vents ⇒ Item 24 (page 53) and ⇒ Item 26 (page 53) .

22 - Rear duct

- ❑ Renewing: first remove centre console, footwell vents ⇒ Item 24 (page 53) and ⇒ Item 26 (page 53) , seats and carpet.

23 - Seal

- ❑ Renew.

24 - Footwell vent, lower part

- ❑ Removing and installing ⇒ page 28 .

25 - Air duct grille

26 - Footwell vent, lower part

- ❑ Removing and installing ⇒ page 28 .

Protected by copyright. Copying for private or commercial purposes, in part or in whole, is not permitted unless authorised by Volkswagen AG. Volkswagen AG does not guarantee or accept any liability with respect to the correctness of information in this document. Copyright by Volkswagen AG.
satelettronica

27 - Distribution box*

- ❑ With temperature flap.
- ❑ With central flap.
- ❑ With footwell/defroster flap.
- ❑ Do not dismantle further.

28 - Heat exchanger*

- ❑ Seals must be bonded free of gaps all around.
- ❑ If tabs do not engage when inserted or if they have broken off, bolt on heat exchanger.
- ❑ After removal, completely renew coolant.
- ❑ Install support for vacuum line ⇒ page 56 .

29 - Seal*

- ❑ Renew.

30 - Support for vacuum line

- ❑ Installing ⇒ page 56 .

31 - Evaporator housing*

- ❑ With evaporator.

32 - Left air duct

- ❑ Removing and installing: remove left vent ⇒ Item 34 (page 54) and dash panel insert ⇒ Rep. Gr. 90 .

33 - Intermediate piece

- ❑ With seal.
- ❑ To renew, remove dash panel ⇒ Rep. Gr. 70 .

34 - Left vent

- ❑ Removing ⇒ page 28 .
- ❑ Do not dismantle further (vent and adjustable louver are one spare part).

35 - Central vents

- ❑ Removing ⇒ page 28 .

2.2 Removing air conditioning system switch -E30-

2.2.1 Removing

– Remove centre vent ⇒ page 28 .

– Press switch at the four locking points -arrows- simultaneously against controls and in direction of buttons.

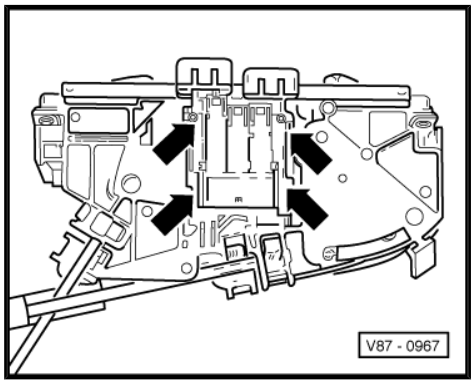

Protected by copyright. Copying for private or commercial purposes, in part or in whole, is not permitted unless authorised by Volkswagen AG. Volkswagen AG does not guarantee or accept any liability with respect to the correctness of information in this document. Copyright by Volkswagen AG.
satelettronica

2.3 Renewing fresh air blower series resistor with overheating fuse -N24-

– Remove glove box ⇒ Rep. Gr. 68 or passenger side airbag unit ⇒ Rep. Gr. 69 .

– Pull out connector -2- and remove bolt -3-.

– Before installation, seal area between series resistor -1- and air duct with silicone adhesive sealant -D 176 001 A3- .

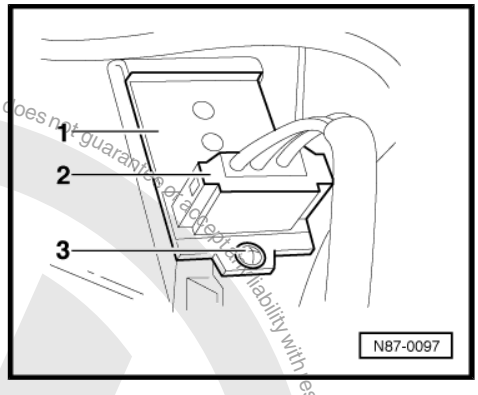

2.4 Removing and installing fresh air blower -V2-

2.4.1 Removing

– Remove glove box ⇒ Rep. Gr. 68 or passenger side airbag unit ⇒ Rep. Gr. 69 .

– Pull off connector -1-.

– Remove the 5 bolts -arrows- and pull fresh air blower -2- out downwards.

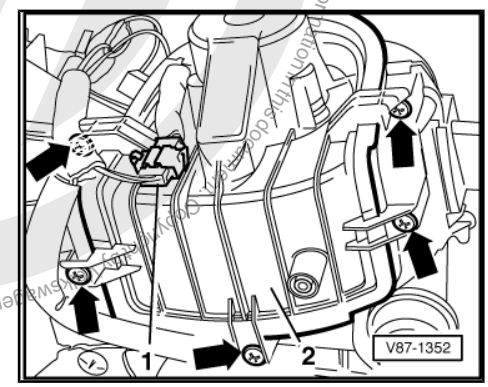

2.4.2 Installing

Install in reverse order.

2.5 Renewing temperature switch for evaporator -E33-

1 - Temperature switch with housing

2 - Rubber grommet

3 - Sensor tube with marking for insertion depth

4 - Self-tapping fillister head screw

5 - Connector

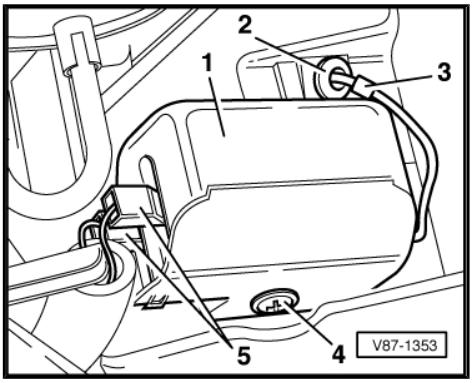

2.6 Removing and installing vacuum unit for fresh air and air recirculation flap

– Remove right vent ⇒ page 27 .

Protected by copyright. Copying for private or commercial purposes, in part or in whole, is not permitted unless authorised by Volkswagen AG. Volkswagen AG does not guarantee or accept any liability with respect to the correctness of information in this document. Copyright by Volkswagen AG.
satelettronica

Protected by copyright. Copyright by Volkswagen AG. Volkswagen AG does not guarantee or accept any liability with respect to the correctness of information in this document. Copyright by Volkswagen AG. Volkswagen AG, is not permitted unless authorised by Volkswagen AG. Volkswagen AG does not guarantee or accept any liability with respect to the correctness of information in this document. Copyright by Volkswagen AG.

– Remove glove box ⇒ Rep. Gr. 68 or passenger side airbag unit ⇒ Rep. Gr. 69 .
– Pull off vacuum hose.
– Release vacuum unit from lever for fresh air and air recirculation flap in -direction of arrow A-.
– Unclip vacuum unit from evaporator housing and pull in -direction of arrow B-.

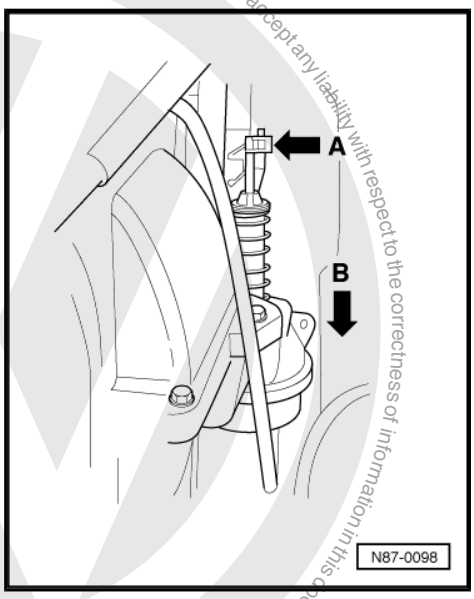

2.7 Installing support for vacuum line

- When installing new heat exchanger -1- in vehicles with fresh air and air recirculation flap or with air conditioning system, install support for vacuum line -2-.
- Renew seal -3-.

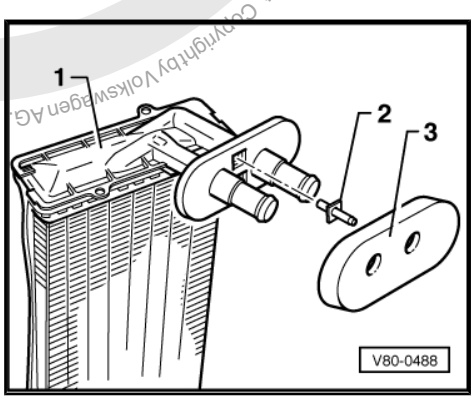

2.8 Repairing air conditioning and heating - engine compartment

Note

Parts marked "" can be repaired only in workshops with suitable equipment and specially trained mechanics because the refrigerant must be evacuated beforehand using, for example, the air conditioning service station -VAS 6007A- .*

satelettronica

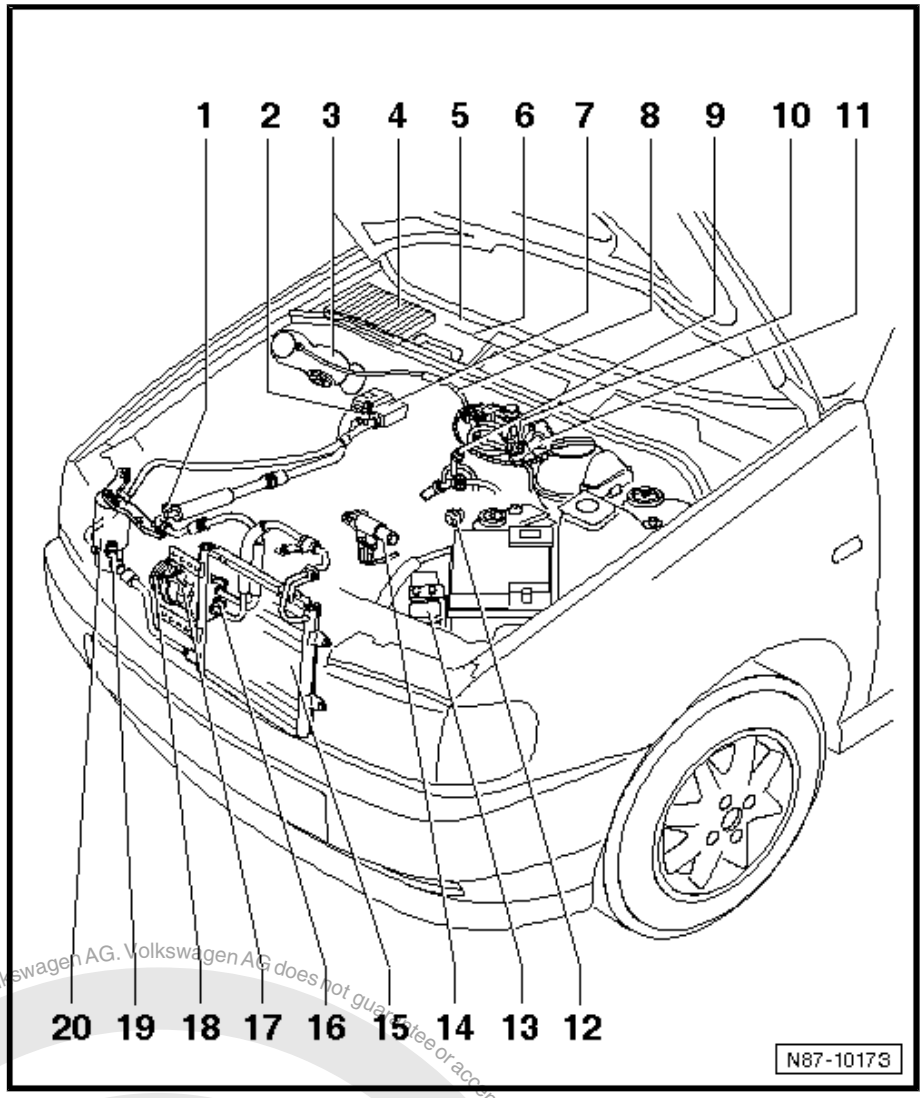

1 - Evacuating and charging valve*

- ❑ Low pressure side.

2 - Evacuating and charging valve*

- ❑ High pressure side.

3 - Vacuum reservoir

- ❑ Behind right wheel housing lining.
- ❑ Insertion depth for vacuum hose: 30 mm.
- ❑ Removing and installing ⇒ page 59 .

4 - Dust and pollen filter

- ❑ Below plenum chamber cover ⇒ Item 5 (page 57) .
- ❑ Removing ⇒ page 26 .

5 - Plenum chamber cover

- ❑ Removing and installing ⇒ page 25 .

6 - Ambient temperature switch -F38-

- ❑ Below plenum chamber cover ⇒ Item 5 (page 57) .
- ❑ Only for internally regulated air conditioner compressor.

7 - Expansion valve*

- ❑ Aperture must be sealed against splashed water.

8 - Vacuum hose

- ❑ In plenum chamber.
- ❑ Vacuum hose connection diagram ⇒ page 63 .

9 - Non-return valve

Arrow points in direction of suction.

10 - Two-way valve for fresh and recirculating air flap -N63-

- ❑ Open when current is supplied.
- ❑ Vacuum hose connection diagram ⇒ page 63 .
- ❑ Removing and installing ⇒ page 58 .

11 - Aperture for heat exchanger and vacuum hose

12 - Water drain valve

- ❑ Removing and installing ⇒ page 59 .
- ❑ Lip valve must not become glued with underbody protection.

13 - Radiator fan control unit -J293-

14 - Air conditioning system shut-off thermal switch -F163-

- ❑ Air conditioning system shut-off thermal switch -F163- switches off air conditioning system magnetic coupling -N25- when the coolant temperature is too high (off at 119°, on at 112°).
- ❑ Removing and installing ⇒ page 58 .

Copyright by Volkswagen AG. Volkswagen AG does not guarantee or accept any liability with respect to the correctness of information in this document. Copying for private or commercial purposes, in part or in whole, is not permitted unless authorised by Volkswagen AG.
satelettronica

15 - Condenser*

16 - High-pressure safety valve*

- ❑ Checking ⇒ page 59 .

17 - Air conditioner compressor*

- ❑ Manufacturer: Sanden, designation: SD7-B10

18 - Air conditioning system magnetic coupling -N25-

19 - Air conditioning system pressure switch -F129-

- ❑ Checking air conditioning system pressure switch -F129- ⇒ page 60 .
- ❑ Removing and installing:
- ❑ Tightening torque 8 Nm.
- ❑ Renew O-ring (note part number).

20 - Receiver with dryer bag*

- ❑ Functions ⇒ page 119 .

2.9 Removing and installing air conditioning shut-off thermal switch -F163-

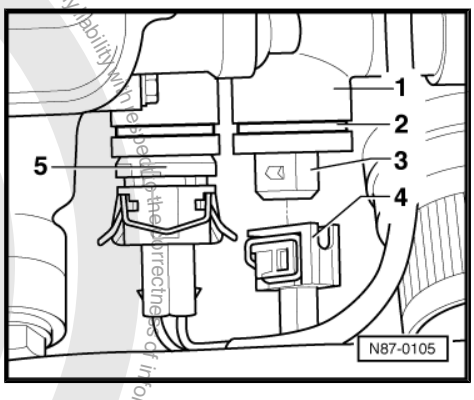

WARNING

Danger of scalding injuries.

The cooling system is pressurised. When the engine is warm, the coolant temperature may be above 100° C.

If necessary, release pressure before carrying out repairs.

Note

Refill with coolant after installing thermal switch.

1 - Thermostat housing

2 - Clip

3 - Air conditioning system shut-off thermal switch -F163-

4 - Connector housing

5 - Coolant temperature display sender -G2- / coolant temperature sender -G62- , black with yellow ring

2.10 Removing and installing two-way valve for fresh and recirculating air flap -N63-

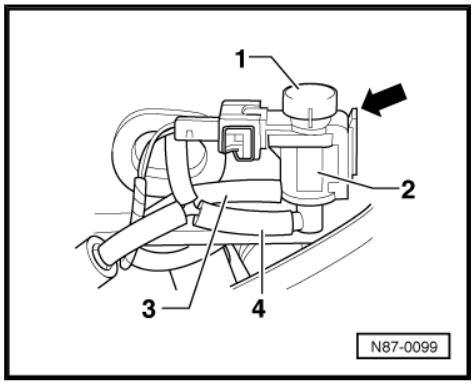

1 - Cap

2 - Observe air-permeable slit.

3 - Two-way valve (other designs possible)

4 - Vacuum hose to vacuum unit for fresh air and air recirculation flap

5 - Vacuum hose to vacuum unit and engine

– Release two-way valve for fresh and recirculating air flap -N63- -arrow- and pull downwards.

Protected by copyright. Copyright by Volkswagen AG. Volkswagen AG does not guarantee or accept any liability whatsoever for the correctness of information in this document. Copyright by Volkswagen AG. Copying for private or commercial purposes, in part or in whole is not permitted unless authorised by Volkswagen AG.
satelettronica

2.11 Removing and installing vacuum unit

– Removing and installing right wheel housing liner ⇒ Rep. Gr. 66 .

1 - Plastic tube, insertion depth 30 mm

2 - Rubber seal

3 - Vacuum reservoir

4 - Nut

5 - Right wheel housing liner

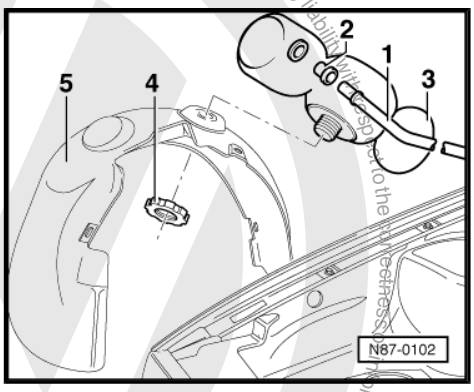

2.12 Removing and installing water drain valve

1 - Water drain valve

2 - Bulkhead

3 - Water drain pipe on evaporator housing

4 - Assembly plate

– Install water drain valve with opening of lip seal downwards.

• Lip valve must not become glued with underbody protection.

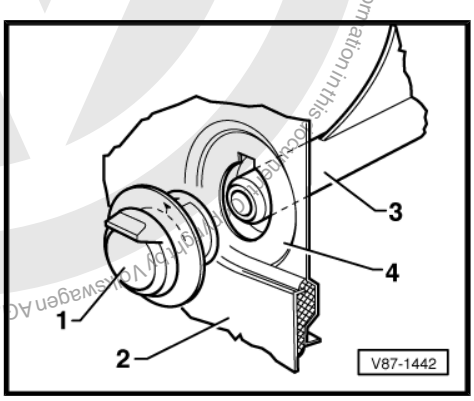

2.13 Checking high-pressure safety valve on air conditioner compressor

WARNING

Danger of freezing injuries.

The pressure relief valve releases refrigerant when the engine is running and the pressure in the refrigerant circuit is too high.

Switch off engine.

- Task: protects the refrigerant circuit against excessive pressure.
- The high-pressure safety valve indicates whether the valve has been opened. An attached adhesive plate -arrow- is pushed out.
- In this case, the vehicle should be sent to a workshop with appropriate equipment and specially trained mechanics.

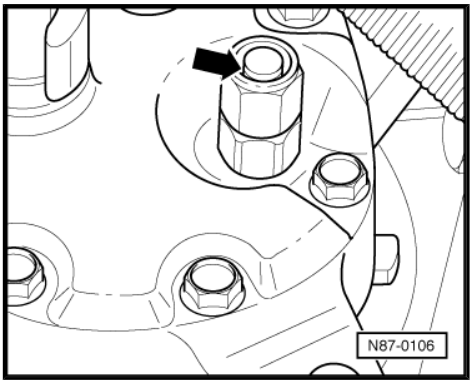

Protected by copyright. Copying for private or commercial purposes, in part or in whole, is not permitted unless authorised by Volkswagen AG. Volkswagen AG does not guarantee or accept any liability with respect to the correctness of information in this document. Copyright by Volkswagen AG.

satelettronica

2.14 Checking air conditioning system pressure switch -F129-

Note

- *The pressure switch can be removed without extracting the refrigerant from the refrigerant circuit.*
- *Visual check: ensure that O-ring 10.8 mm x 1.8 mm is seated in groove.*

Switch part between chamber 1 and chamber 2 of connector housing switches air conditioning system magnetic coupling -N25- off when refrigerant circuit is insufficiently filled or pressure is too high:

– Opens below 1.2 bar and closes again above 2.4 bar (switching threshold).

– Opens above 32 bar and closes again below 24 bar (switching threshold).

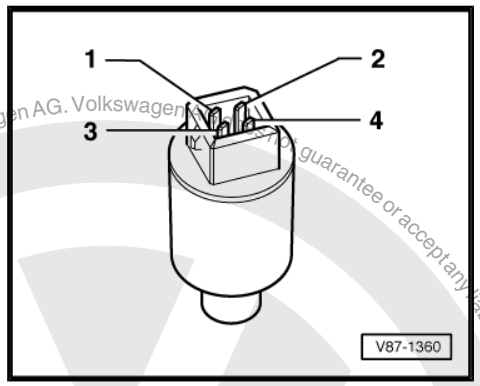

2.14.1 Checking switch part:

– Briefly bridge connections between chambers -1- and -2- while engine is running. If the air conditioning system magnetic coupling -N25- switches on, the refrigerant circuit is empty.

The switch part between chamber -3- and chamber -4- of the connector housing switches the radiator fan -V7- to the second speed via radiator fan control unit -J293- when the pressure in the refrigerant circuit rises.

– Closes above 16 bar and opens below 12.5 bar (switching threshold).

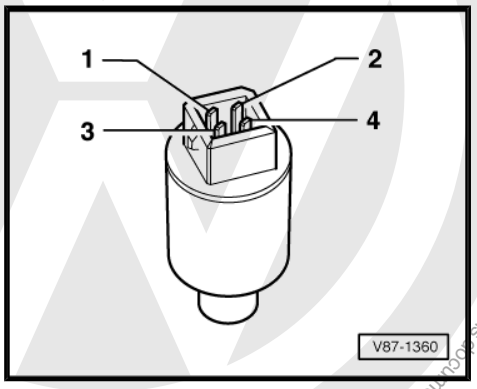

2.14.2 Evaluating checks of air conditioning system pressure switch -F129-

Note

The following checks are performed when installed.

To assess the air conditioner's performance, perform and evaluate the following checks:

- Check the air conditioner's fill level; the air conditioner is switched off if the pressure is too low (for example, loss of refrigerant).
- Check blower switch-on; radiator fan -V7- is switched to the next higher speed when the pressure in the refrigerant circuit rises (excessive pressure).
- Check air conditioner switch-off; the air conditioner is switched off when pressure is excessive (for example when engine cooling is insufficient).

Protected by copyright. Copying for private or commercial purposes, in part or in whole, is not permitted unless authorised by Volkswagen AG. Volkswagen AG does not guarantee or accept any liability with respect to the correctness of information in this document. Copyright by Volkswagen AG.
satelettronica

2.15 Installing and adjusting cables

Note

- *First connect cables to removed controls, then adjust cables at air conditioner levers and secure them.*
- *Place Bowden cable sheath against stops on controls and secure.*
- *Adjust cables at flap levers with controls installed.*
- *When control knobs are turned, all flaps must audibly contact stop.*

1 - Footwell/defroster flap cable

- ❑ From air distribution rotary knob to footwell/defroster flap.
- ❑ Black sheath.
- ❑ Adjust cable at footwell/defroster flap ⇒ page 61 .

2 - Central flap cable

- ❑ From air distribution rotary control to central flap.
- ❑ Yellow sheath.
- ❑ Adjusting cable at central flap ⇒ page 62 .

3 - Temperature flap cable

- ❑ From temperature rotary knob to temperature flap.
- ❑ Blue sheath.
- ❑ Adjusting cable at temperature flap ⇒ page 62 .

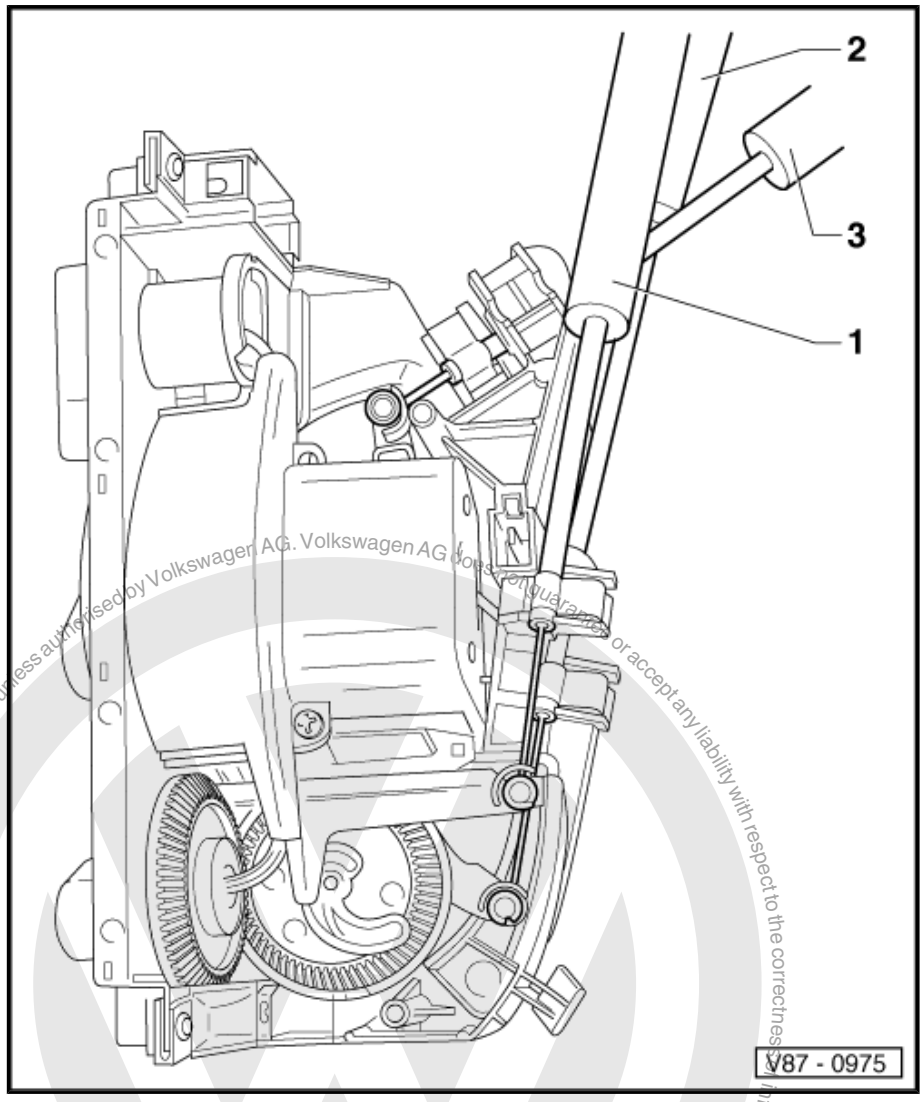

2.15.1 Adjusting cable at footwell/defroster flap

Note

To adjust cable at lever of footwell/defroster flap, driver side compartment must be removed.

– Remove driver side compartment ⇒ Rep. Gr. 68 .
– Install controls for heated air and fresh air blower ⇒ page 25 .

satelettronica
Reproduced by copyright. Copying for private or commercial purposes, in part or in whole, is not permitted unless authorised by Volkswagen AG. Volkswagen AG does not guarantee or accept any liability with respect to the correctness of information in this document. Copyright by Volkswagen AG.

– Set air distribution rotary knob to stop of Defrost position.
– Press footwell/defroster flap lever to stop -arrow- and secure black cable sheath.

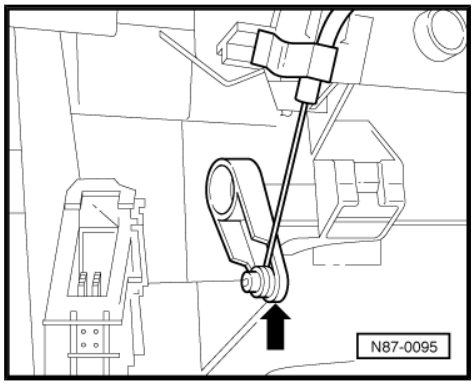

2.15.2 Adjusting cable at central flap

Note

To adjust cable at lever of central flap, footwell vent must be removed ⇒ page 28 .

– Install controls for heated air and fresh air blower ⇒ page 25 .
– Turn air distribution rotary knob to stop of Defrost position.
– Press central flap lever to stop -arrow- and secure black cable sheath.

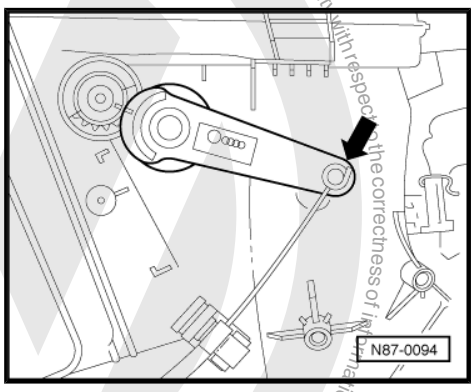

2.15.3 Adjusting cable at temperature flap

Note

To adjust cable at lever of temperature flap, footwell vent must be removed ⇒ page 28 .

– Install controls for heated air and fresh air blower ⇒ page 25 .
– Turn temperature rotary knob to stop of “cold” position.

Protected by copyright. Copying for private or commercial purposes, in part or in whole, is not permitted unless authorised by Volkswagen AG. Volkswagen AG does not guarantee or accept any liability with respect to the correctness of information in this document. Copyright by Volkswagen AG.
satelettronica

– Press temperature flap lever to stop -arrow- and secure blue cable sheath.

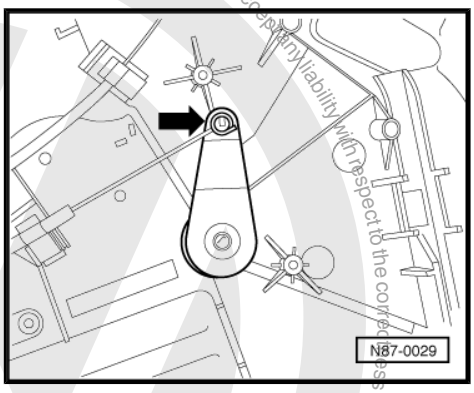

2.16 Vacuum hose connection diagram

Note

- *Insertion depth for vacuum hose in vacuum reservoir: 30 mm, push-on depth for vacuum hose on plastic pipe: to stop (approx.15 mm).*
- *In a petrol engine, vacuum is created by the intake manifold.*

1 - Fresh air and air recirculation flap vacuum unit

❑ In passenger compartment.

2 - Hose

- 6.3 x 2.5 x 1100 mm

❑ In passenger compartment.

3 - Grommet

4 - Two-way valve for fresh and recirculating air flap -N63-

5 - Reduction hose

6 - Distribution piece

7 - Hose

- 3.5 x 2 x 40 mm

8 - Non-return valve

- Arrow points in direction of suction.

9 - Hose

- 3.5 x 2 x 80 mm

10 - Hose

- 3.5 x 2 x 40 mm

11 - Plastic pipe

- 4 x 1 x 320 mm

12 - Hose

- 3.5 x 2 x 40 mm

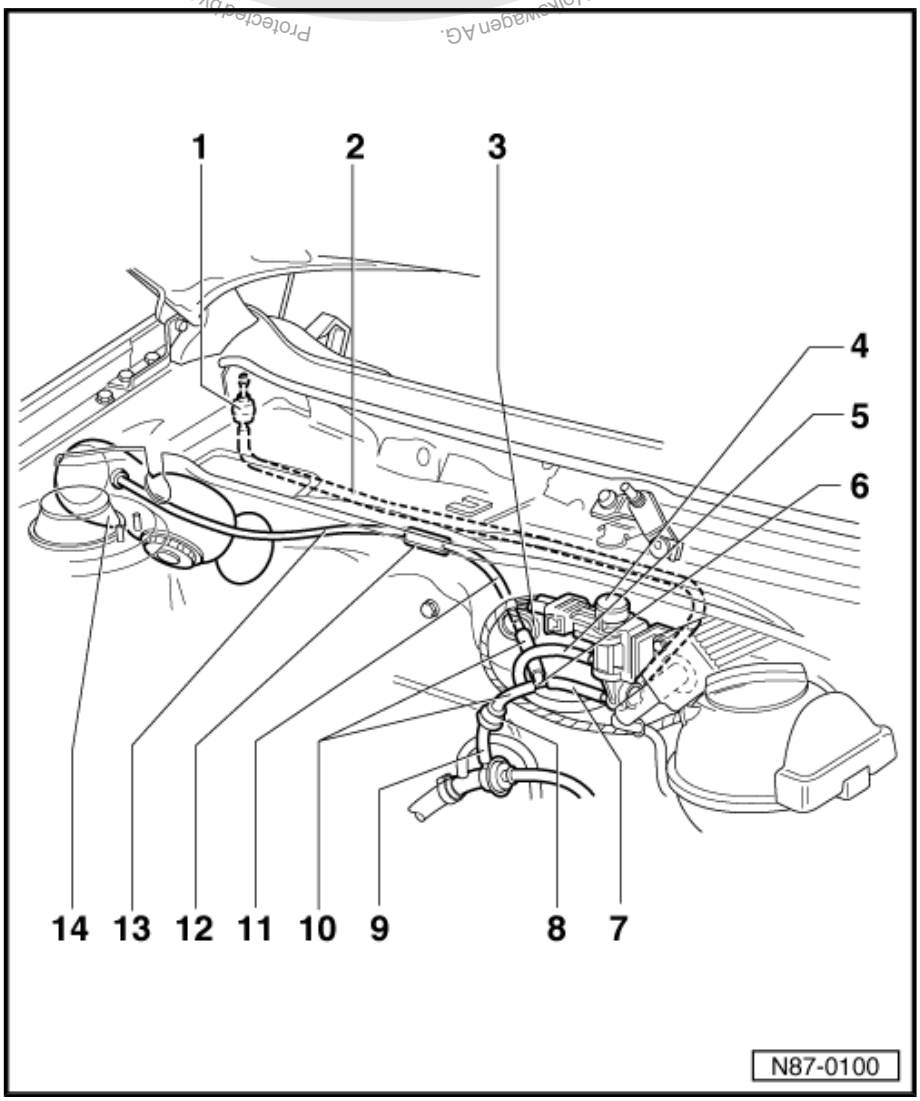

Protected by copyright. Copyright by Volkswagen AG.
Volkswagen AG does not guarantee or accept any liability with respect to the correctness of information in this document. Copyright by Volkswagen AG.
Reproduction, in part or in whole, is not permitted unless authorised by Volkswagen AG.
For private or commercial purposes, in part or in whole, is not permitted unless authorised by Volkswagen AG.
satelettronica

13 - Plastic pipe

- 4 x 1 x 490 mm

14 - Vacuum reservoir

Protected by copyright. Copying for private or commercial purposes, in part or in whole, is not permitted unless authorised by Volkswagen AG. Volkswagen AG does not guarantee or accept any liability with respect to the correctness of information in this document. Copyright by Volkswagen AG.

satelettronica

3 Air conditioning system with manual controls, vehicles 10.99 ▸

3.1 Air conditioning and heating system - passenger compartment

3.1.1 Before beginning repair work, perform the following steps:

– Switch off all electrical consumers.
– Switch off ignition.
– Pull out ignition key.

Note

Parts marked "" can be repaired only in workshops with suitable equipment and specially trained mechanics because the refrigerant must be evacuated beforehand using, for example, the air conditioning service station -VAS 6007A- .*

1 - Air duct

2 - Dust and pollen filter

- ❑ In plenum chamber.
- ❑ With active charcoal filter.
- ❑ Removing and installing ⇒ page 37 .

3 - Heating and air conditioning controls

- ❑ With built-in air conditioning system switch -E30- .
- ❑ With fresh air blower switch -E9- .
- ❑ With fresh air and air recirculation flap switch -E159- .
- ❑ Removing and installing ⇒ page 67 .
- ❑ Dismantling and assembling ⇒ page 68 .

4 - Dash panel

- ❑ Removing and installing ⇒ Rep. Gr. 70 .

5 - Vent on front passenger side

- ❑ Removing vent ⇒ page 39 .

6 - Fresh air and air recirculation flap control motor -V154-

- ❑ Removing and installing ⇒ page 47 .

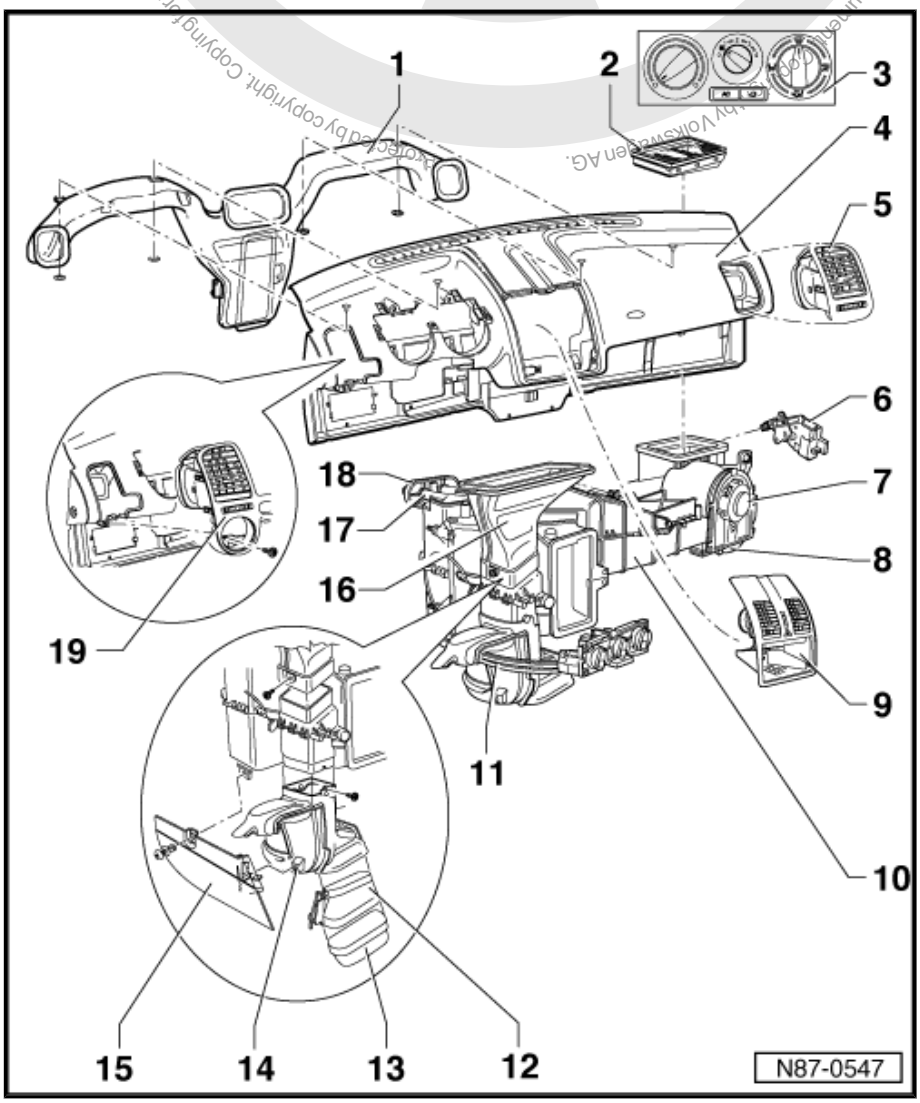

satelettronica

7 - Fresh air blower -V2-

- ❑ Removing ⇒ page 66 .

8 - Fresh air blower series resistor with overheating fuse -N24-

- ❑ Removing ⇒ page 66 .

9 - Central vents

- ❑ Removing vent ⇒ page 38 .

10 - Heater and air conditioner*

- ❑ Removing ⇒ page 135 .
- ❑ Dismantling and assembling evaporator housing ⇒ page 138 .

11 - Cables

- ❑ Installing and adjusting ⇒ page 70 .

12 - Connecting piece

13 - Cover

14 - Footwell vent

- ❑ Removing vent ⇒ page 41 .

15 - Footwell system

16 - Intermediate piece, defrost

- ❑ To renew, remove and install dash panel ⇒ Rep. Gr. 70 .

17 - Heat exchanger*

- ❑ Removing ⇒ page 138 .

18 - Heat exchanger/bulkhead seal*

- ❑ Removing ⇒ page 138 .
- ❑ Note installation position ⇒ page 47 .

19 - Vent on driver side

- ❑ Removing vent ⇒ page 40 .

3.2 Removing fresh air blower -V2-

3.2.1 Removing

1 - Heating and air conditioning

2 - Fresh air blower -V2-

3 - Fresh air blower series resistor with overheating fuse -N24-

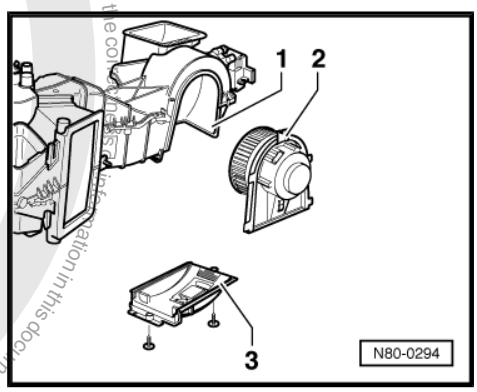

– Remove driver side footwell cover ⇒ Rep. Gr. 68 .

– Remove centre console ⇒ Rep. Gr. 68 .

– Remove compartment on passenger side ⇒ Rep. Gr. 68 .

– Pull connector off fresh air blower series resistor with overheating fuse -N24- .

– Renew fresh air blower series resistor with overheating fuse -N24- .

– Pull fresh air blower -V2- out downwards.

satelettronica

3.3 Removing and installing heating and air conditioning controls

3.3.1 Removing

– Press downwards with finger tips in compartment -1-.

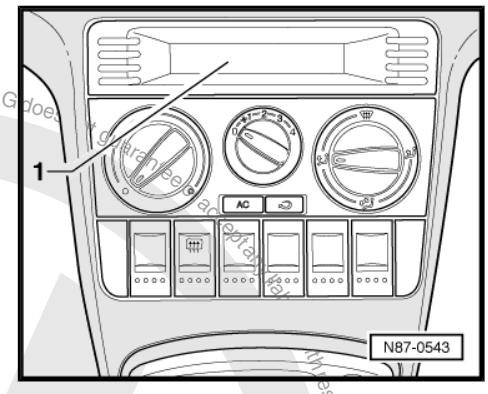

– Pull trim off controls -arrows-.

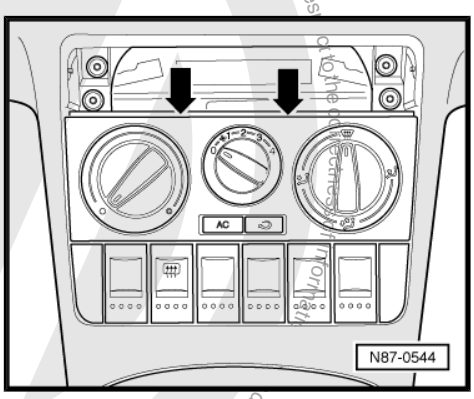

– Remove bolts -arrows-.
– Remove driver side footwell cover ⇒ Rep. Gr. 68 .
– Remove centre console ⇒ Rep. Gr. 68 .

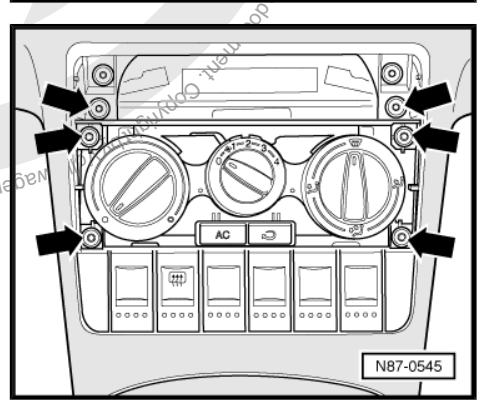

– Release cables on controls -arrows-.
– Pull off connectors -1- and -2-.

As soon as controls have been removed, check function of cables for heated air and fresh air.

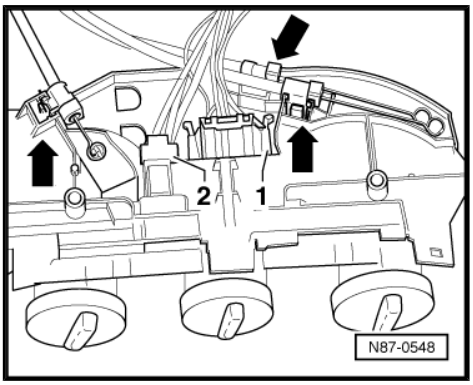

Protected by copyright. Copying for private or commercial purposes, in part or in whole, is not permitted unless authorised by Volkswagen AG. Volkswagen AG does not guarantee or accept any liability with respect to the correctness and completeness of this electronic document. Copyright by Volkswagen AG.
satelettronica

– To do so, move wire ends of cables back and forth in -direction of arrow-.

– Replace damaged or stiff cables.

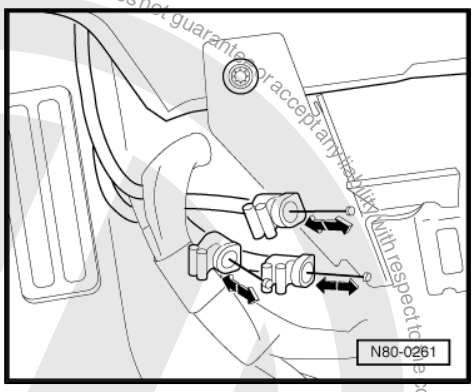

3.3.2 Installing

Note

- *The cable sheaths are colour coded.*
- *Check cables before installing; replace stiff or damaged cables.*
- *When control knobs are turned, all flaps must audibly contact stop.*

– Bend wire ends of cables -1- and press onto lever of control -2- -arrow-.

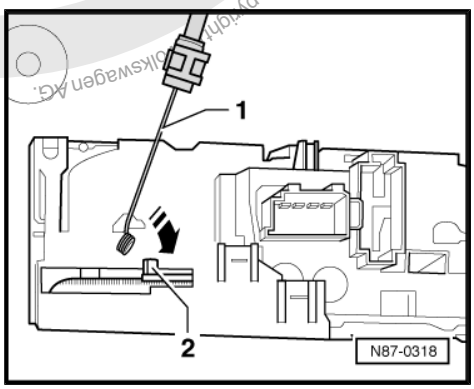

– Press cable for footwell/defroster flap, cable for temperature flap and cable for central flap -1- into locking device -2- until it engages.

Identification of footwell/defroster flap cable: left-hand drive: green; right-hand drive: black.

Identification of central flap cable: left-hand drive: yellow; right-hand drive: grey.

Identification of temperature flap cable: red left-hand drive: beige; right-hand drive: white.

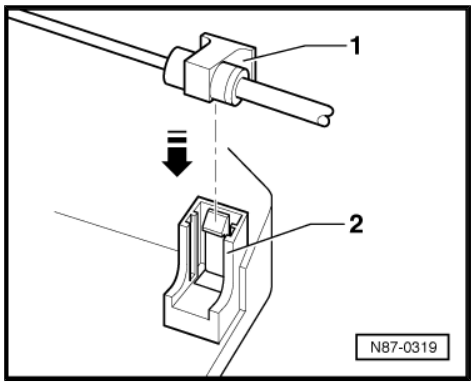

3.4 Dismantling and assembling heating and air conditioning controls

Protected by copyright. Copyright by Volkswagen AG. Volkswagen AG does not guarantee or accept any liability with respect to the correctness of information in this document. Copying for private or commercial purposes, in part or in whole, is not permitted unless authorised by Volkswagen AG.
satelettronica

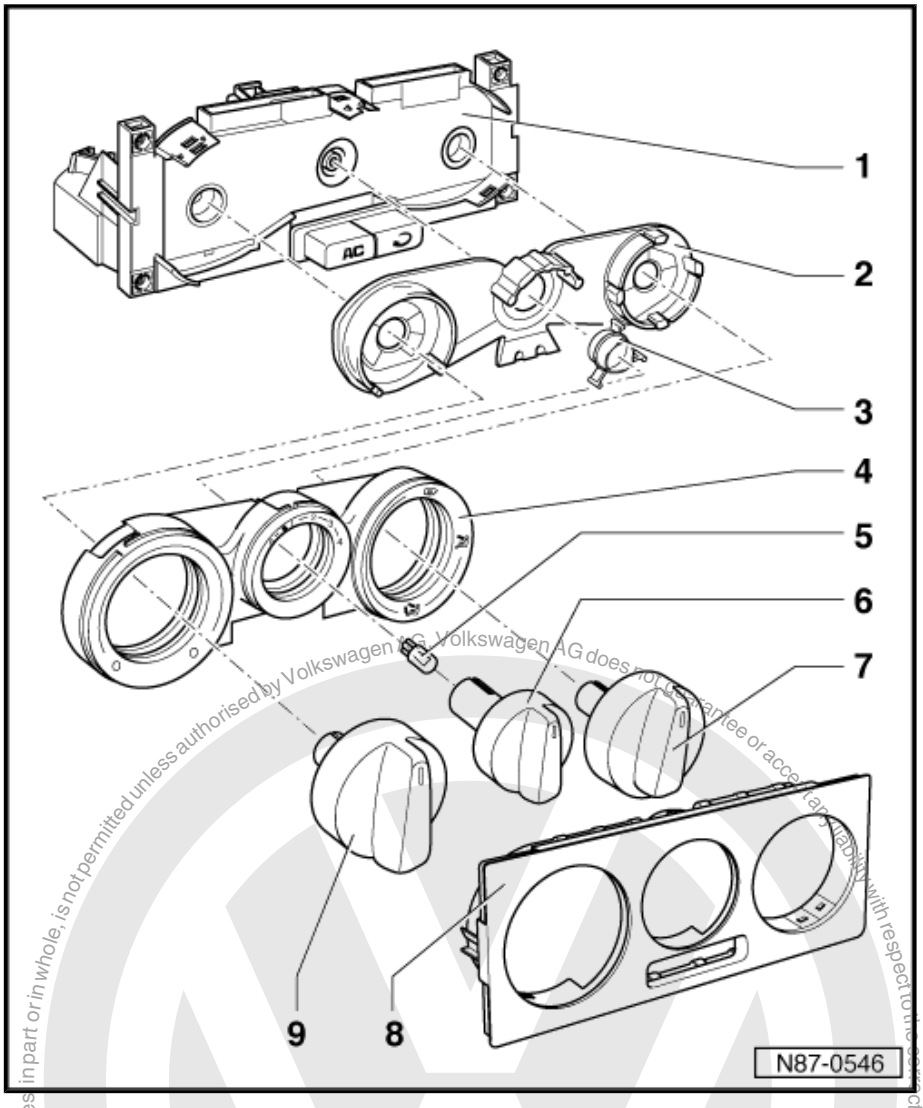

1 - Heating and air conditioning controls

- ❑ With built-in air conditioning system switch -E30- .
- ❑ With fresh air blower switch -E9- .
- ❑ With fresh air and air recirculation flap switch -E159- .
- ❑ Removing and installing ⇒ page 67 .

2 - Light conductor

3 - Coloured filter

4 - Trim

5 - Fresh air regulation light bulb -L16-

- ❑ 12V, 1.2W
- ❑ Removal: unclip trim ⇒ Item 8 (page 69) and rotary knob ⇒ Item 6 (page 69) .
- ❑ Pull out bulb with aid of fuel hose.

6 - Rotary knob

- ❑ For blower speed.
- ❑ To remove: use pliers with suitable plastic or rubber protection on jaws.

7 - Rotary knob

- ❑ For air distribution.
- ❑ To remove: use pliers with suitable plastic or rubber protection on jaws.

8 - Trim

9 - Rotary knob

- ❑ For inside temperature.
- ❑ To remove: use pliers with suitable plastic or rubber protection on jaws.

Protected by copyright. Copying for private or commercial purposes, in part or in whole, is not permitted unless authorised by Volkswagen AG. Volkswagen AG does not guarantee or accept any liability with respect to the correctness of information in this document. Copyright by Volkswagen AG.
satelettronica

3.5 Installing and adjusting heating and air conditioning cables

Note

- *The cable sheaths are colour coded.*
- *Check cables before installing; replace stiff or damaged cables.*
- *First connect cables to removed controls, then adjust cables at air conditioner levers and secure them.*
- *When control knobs are turned, all flaps must audibly contact stop.*

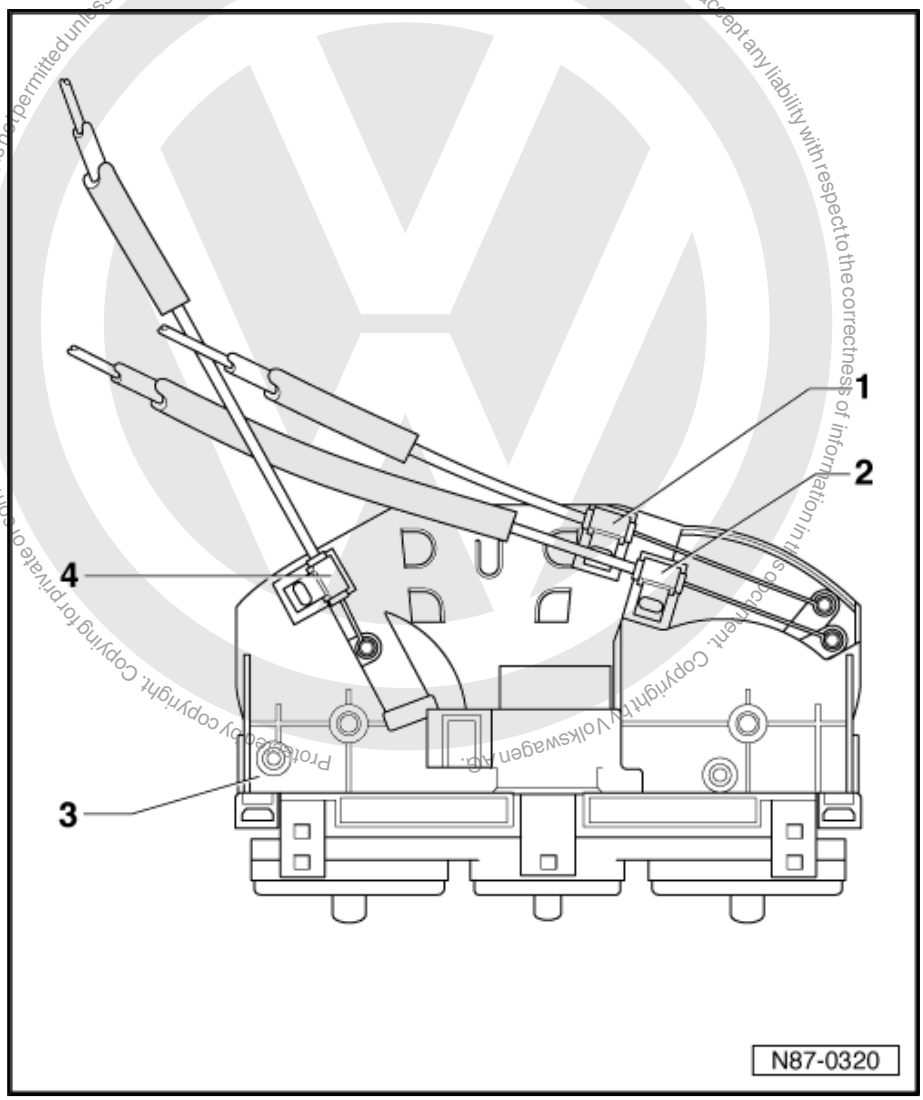

1 - Central flap cable

- ❑ From air distribution rotary control to central flap.
- ❑ Identification of cable sleeve: left-hand drive: yellow; right-hand drive: grey.
- ❑ Adjusting cable at central flap ⇒ page 71 .

2 - Footwell/defroster flap cable

- ❑ From air distribution rotary knob to footwell/defroster flap.
- ❑ Identification of cable sleeve: left-hand drive: green; right-hand drive: black.

Renewing:

- Remove heating and air conditioning controls ⇒ page 67 .
- Remove driver side footwell cover ⇒ Rep. Gr. 68 .
- Unclip cable on heater and air conditioner unit.
- Adjust cable at footwell/defroster flap ⇒ page 71 .

3 - Heating and air conditioning controls

- ❑ Removing ⇒ page 67 .

4 - Temperature flap cable

- ❑ From temperature rotary knob to temperature flap.
- ❑ Identification of cable sleeve: left-hand drive: beige; right-hand drive: white.
- ❑ Adjusting cable at temperature flap ⇒ page 71 .

Protected by copyright. Copying for private or commercial purposes, in part or in whole, is not permitted unless authorised by Volkswagen AG. Volkswagen AG does not guarantee or accept any liability with respect to the correctness of information in this document. Copyright by Volkswagen AG.
satelettronica

3.5.1 Adjusting cable at temperature flap

Prerequisite:

- The heating and air conditioning controls are installed.

Adjusting

– Turn temperature rotary knob to left to stop.

– Attach wire end of cable -1- to temperature flap lever -2-.

– Push on temperature flap lever -2- to stop -arrow A- and secure cable sheath -1- with clip -3-.

– Turn temperature rotary knob left and right to stops.

When turning the control knob, both end stops must be reached.

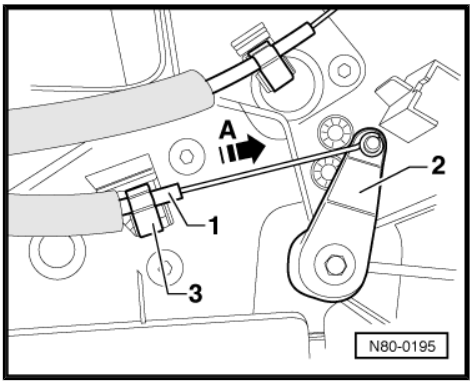

3.5.2 Adjusting cable at footwell/defroster flap

Prerequisite:

- The heating and air conditioning controls are installed.

Adjusting

– Turn air distribution rotary knob to left to stop.

– Attach wire end of cable -1- to temperature flap lever -3-, arrow -A-.

– Push footwell/defroster flap lever to stop -arrow C- and attach cable sheath -1- with clip -2-, -arrow B-.

– Turn air distribution rotary knob left and right to stops.

When turning the control knob, both end stops must be reached.

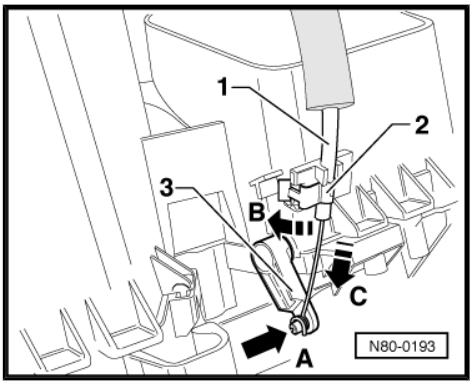

3.5.3 Adjusting cable at central flap

Prerequisite:

- The central flap lever is correctly adjusted ⇒ page 46 .
- The heating and air conditioning controls are installed.

Adjusting

– Turn air distribution rotary knob to left to stop.

satelettronica

– Attach wire end of cable -2- to central flap lever -1-.
– Press footwell/defroster flap lever to stop -arrow A- and secure cable sheath -2- with clip -3-.
– Turn air distribution rotary knob left and right to stops.

When turning the control knob, both end stops must be reached.

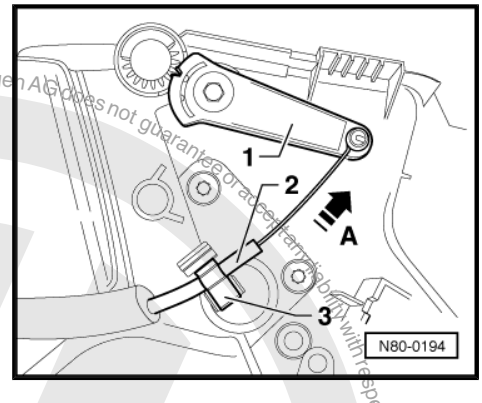

3.6 Air conditioning - engine room

3.6.1 Before beginning repair work, perform the following steps:

– Switch off all electrical consumers.
– Switch off ignition.
– Pull out ignition key.

Note

Parts marked "" can be repaired only in workshops with suitable equipment and specially trained mechanics because the refrigerant must be evacuated beforehand using, for example, the air conditioning service station -VAS 6007A- .*

Protected by copyright. Copying for private or commercial purposes, in part or in whole, is not permitted unless authorised by Volkswagen AG. Volkswagen AG does not guarantee or accept any liability with respect to the correctness of information in this document. Copyright by Volkswagen AG.
satelettronica

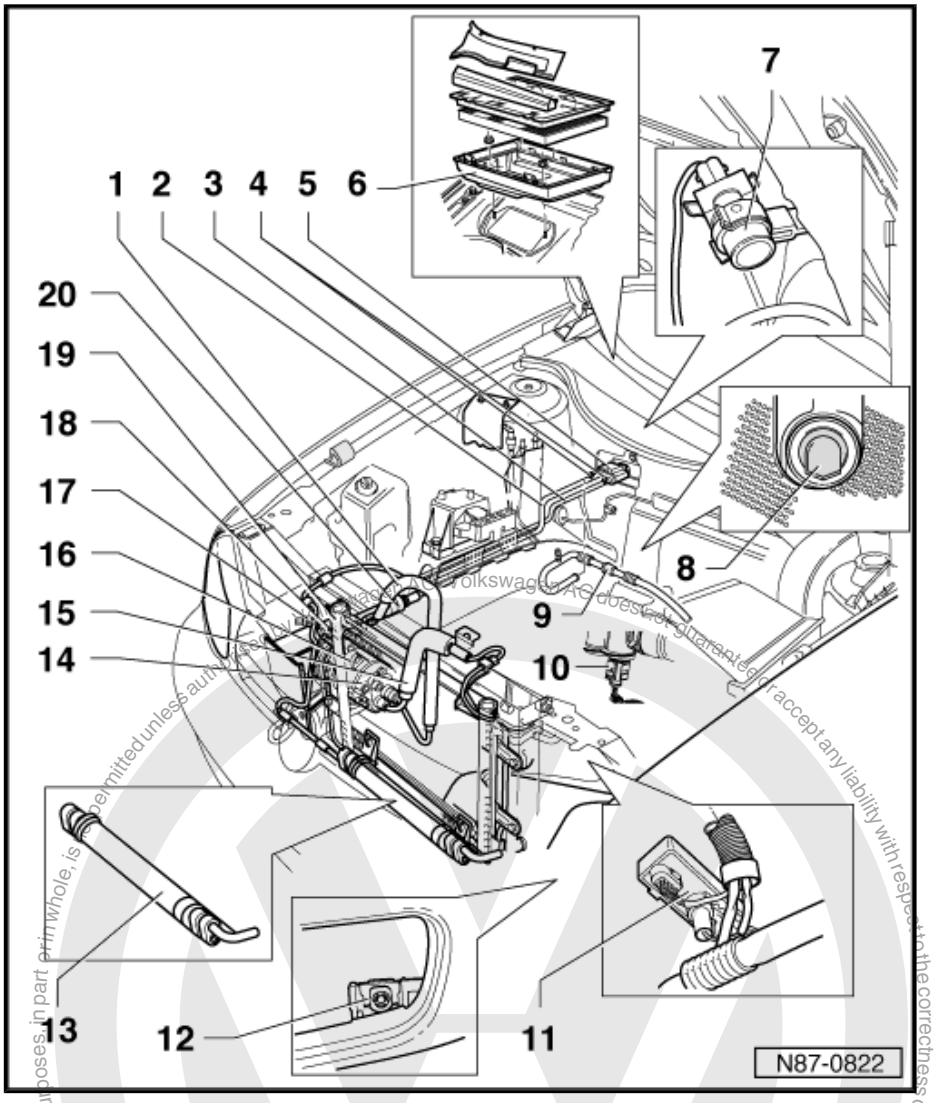

1 - Refrigerant hose*

- ❑ From expansion valve to air conditioner compressor.
- ❑ With damper.

2 - Refrigerant line*

3 - Refrigerant hose*

- ❑ From expansion valve to receiver with dryer bag.

4 - Evacuating and charging valve*

- ❑ Releasing refrigerant into the environment is a punishable offence.

5 - Expansion valve*

6 - Dust and pollen filter

- ❑ With active charcoal filter.
- ❑ Removing and installing ⇒ page 37 .

7 - Ambient temperature switch -F38-

- ❑ From 10.99 replaced by temperature sender for compressor switch-off -G346- .
- ❑ Switches off air conditioning system magnetic coupling -N25- if the ambient temperature is too low (off at -1° C, on at 7° C).
- ❑ Removing ⇒ page 75 .

8 - Water drain valve

- ❑ Checking ⇒ page 74 .

9 - Quick release coupling

- ❑ Removing and installing ⇒ page 129 .
- ❑ Not present with all types of engines.

10 - Coolant temperature sender -G62-

- ❑ Coolant temperature sender -G62- switches off air conditioning system magnetic coupling -N25- when the coolant temperature is too high (off at 119°, on at 112°).

11 - Radiator fan control unit -J293-

12 - Ambient temperature sensor -G17-

- ❑ from 10.99
- ❑ Function: temperature sensor controls temperature flap and fresh air blower, depending on temperature.
- ❑ Emergency operation during failure: fresh air intake duct temperature sensor -G89- takes over the function. If both sensors are defective, operation continues with an assumed value of +10° C. Air recirculation is not possible. The control and display unit for Climatronic air conditioning system -E87- displays “--”.
- ❑ Removing ⇒ page 94 .

13 - Receiver with dryer bag*

- ❑ Functions ⇒ page 129 .

Protected by copyright. Copying for private or commercial purposes, in part or in whole, is not permitted unless authorised by Volkswagen AG. Volkswagen AG does not guarantee or accept any liability with respect to the correctness of information in this document. Copyright by Volkswagen AG.
satelettronica

14 - High-pressure safety valve*

- ❑ Checking ⇒ page 75 .

15 - Refrigerant hose*

- ❑ From air conditioner compressor to condenser.

16 - Air conditioner compressor*

- ❑ Manufacturer: Sanden, designation: SD6-V12

17 - High pressure sender -G65-

- ❑ Removing and installing ⇒ page 75 .
- ❑ Torque setting: 8 Nm
- ❑ Renew O-ring (note part number).
- ❑ The high pressure sender -G65- can be removed without extracting the refrigerant from the refrigerant circuit.

Function:

- ❑ The high pressure sensor -G65- supplies information to radiator fan control unit -J293- and engine control unit.
- ❑ Switches radiator fan -V7- to next higher speed when pressure increases in refrigerant circuit.
- ❑ The high pressure sender -G65- cannot be checked via the Climatronic self-diagnosis, but only via the engine control unit self-diagnosis.
- ❑ Check high pressure sender -G65- ⇒ page 132 .
- ❑ Switches off the air conditioner when the pressure is high (for example, insufficient engine cooling).
- ❑ Switches off the air conditioner when the pressure is too low (for example, loss of refrigerant).

18 - Air conditioning system magnetic coupling -N25-

- ❑ Repairing ⇒ page 104 .

19 - Condenser*

- ❑ Removing ⇒ page 142 .

20 - Damper*

- ❑ In refrigerant hose from expansion valve to air conditioner compressor.

3.7 Checking water drain valve

– Fold cover flap -1- in heat insulation mat -3- on the bulkhead -4- upwards.

– Remove water drain valve -2- from bulkhead -4-.

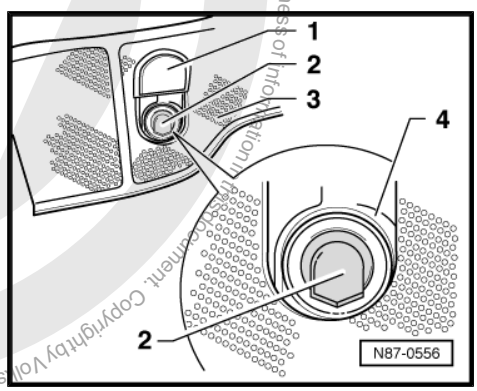

Check water drain valve as follows to ensure that it functions correctly:

- ♦ The water drain valve must not be stuck together.
- ♦ The heat insulation mat must not be deformed or damaged in the area around the water drain valve.
- ♦ The opening of the water drain valve flap must point downward.

Note

When closing, the cover flap -1- must be flush with the heat insulation mat. If the cover flap -1- is pushed in too far, the water drain valve shutter flap -2- can get stuck.

Protected by copyright. Copyright by Volkswagen AG. Copying or publication or communication to third parties in whole or in part for commercial purposes is not permitted unless authorised by Volkswagen AG. Volkswagen AG does not guarantee or accept any liability with respect to the correctness of information in this document.

satelettronica

3.8 Removing high pressure sender -G65-

– Pull off connector -1-.
– Unbolt high pressure sender -G65- -2-.
– Renew seal.

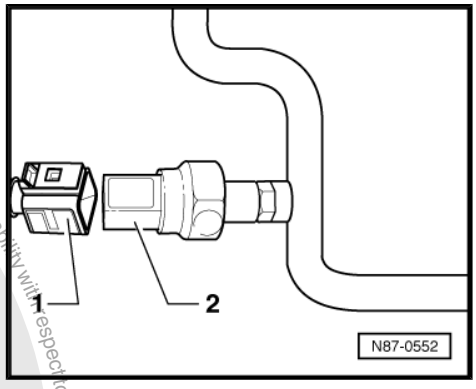

3.9 Removing ambient temperature switch -F38-

– Pull off connector -1-.
– Unclip ambient temperature switch -3- from retainer -2-.

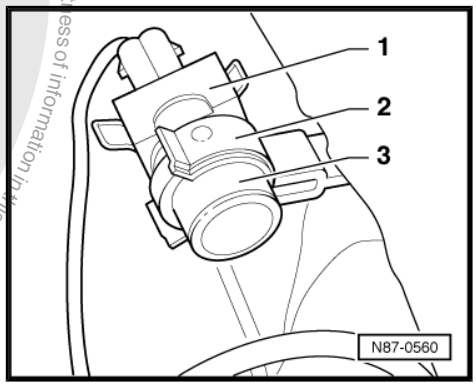

3.10 Checking high-pressure safety valve on air conditioner compressor

WARNING

Danger of freezing injuries.

The pressure relief valve releases refrigerant when the engine is running and the pressure in the refrigerant circuit is too high.

Switch off engine.

- Task: protects refrigerant circuit against excessive pressure.
- The high-pressure safety valve indicates whether the valve has been opened. An attached adhesive plate -arrow- is pushed out.
- In this case, the vehicle should be sent to a workshop with appropriate equipment and specially trained mechanics.

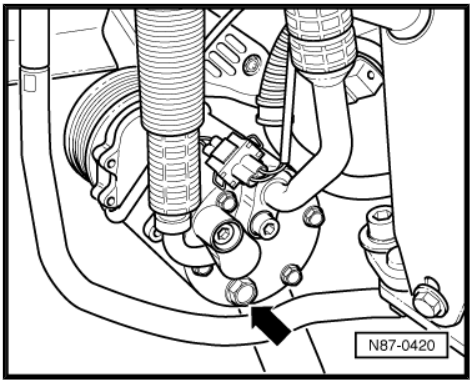

Protected by copyright. Copyright by Volkswagen AG. Volkswagen AG does not guarantee or accept any liability with respect to the correctness of information in this document. Copyright by Volkswagen AG. Protected by copyright. Copying for private or commercial purposes, in part or in whole, is not permitted unless authorised by Volkswagen AG.

satelettronica

4 Climatronic air conditioning system with automatic regulation, vehicles 10.99 ▸

Note

- *Pressing the "AUTO" button will cancel all settings which deviate from automatic operation.*
- *In ECON mode, only the air conditioner compressor is switched off; heating and ventilation continue to be controlled electronically.*
- *Modifications made to automatic operation before the engine is switched off will be saved. Only the "Air recirculation" function is erased 20 minutes after the ignition has been switched off.*
- *Deviations from automatic operation ⇒ appropriate operating instructions .*
- *If all of the symbols displayed in the operating and display unit for Climatronic conditioning -E87- are flashing after the ignition has been switched on, there is a defect in the system. In this case, first read fault memory* *⇒ page 4* *.*

4.1 Function of operating and display unit for Climatronic air conditioning system - E87-

4.1.1 Before beginning repair work, perform the following steps:

– Switch off all electrical consumers.

– Switch off ignition.

– Pull out ignition key.

Protected by copyright. Copying for private or commercial purposes, in part or in whole, is not permitted unless authorised by Volkswagen AG. Volkswagen AG does not guarantee or accept any liability with respect to the correctness of information in this document. Copyright by Volkswagen AG.
satelettronica

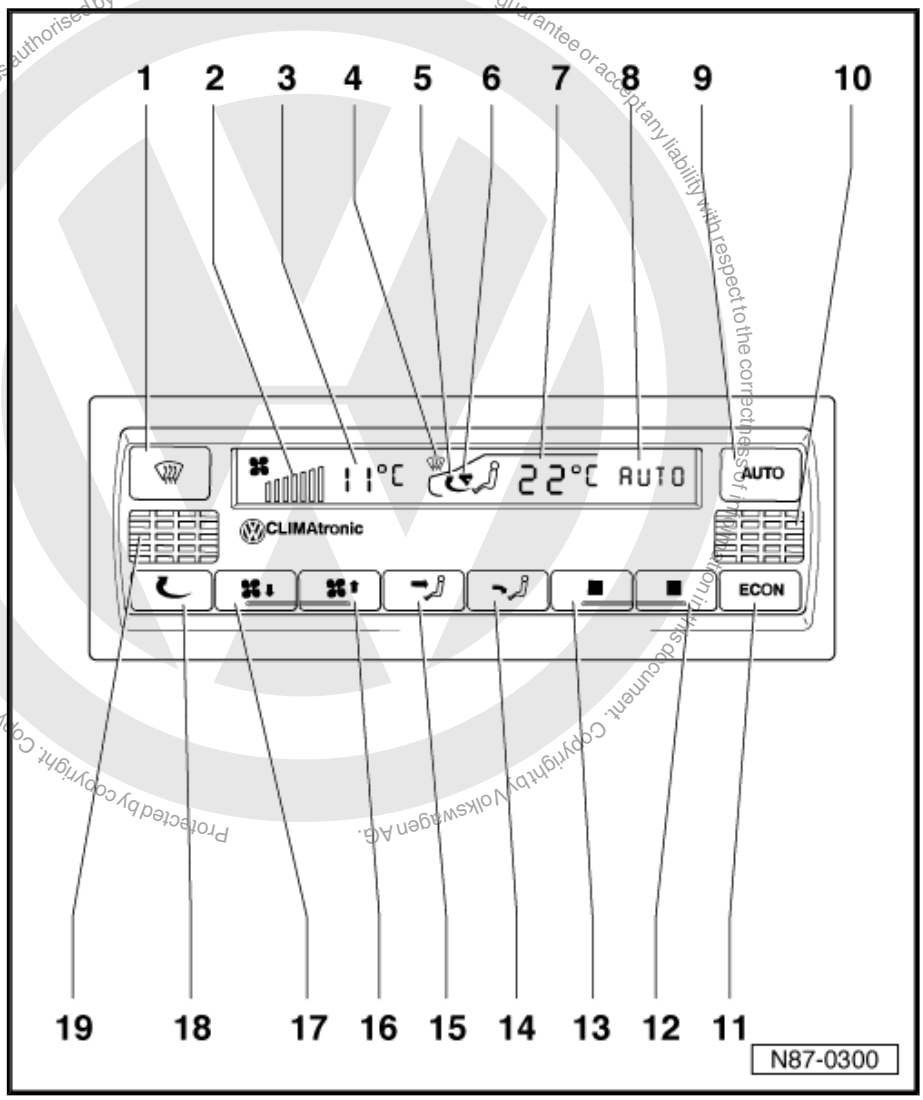

1 - Windscreen defroster button

2 - Display for blower speed

- ❑ In automatic operation ⇒ Item 8 (page 77) a medium blower speed is displayed regardless of the actual blower speed.

3 - Display for ambient temperature

- ❑ If the road speed falls below 15 km/h and the coolant temperature is above 70° C, the value displayed will not change. The actual ambient temperature measured is not displayed because it is influenced by the heat build-up in the engine at lower speeds.

4 - Display for defrosting windscreen

5 - Display for air recirculation

6 - Display for air flow direction

- ❑ Pressing button ⇒ Item 14 (page 78) switches the footwell air-flow display on or off.
- ❑ Pressing button ⇒ Item 15 (page 78) switches the upper-body air-flow display on or off.

7 - Display for selected interior temperature

- ❑ Switching between Celsius and Fahrenheit:
- ❑ Press and hold button ⇒ Item 11 (page 78) and then press button ⇒ Item 9 (page 77) .
- ❑ The corresponding temperature unit appears in the display.

8 - Operating mode display

“AUTO”: Automatic mode

- ❑ In automatic mode, the Climatronic maintains the selected interior temperature automatically. With this setting, the vent air temperature, the blower speed and the air distribution are controlled automatically.

“ECON”: conditioning system off

- ❑ In ECON mode, only the air conditioner compressor is switched off; heating and ventilation continue to be controlled automatically.

“OFF”: complete system is switched off.

- ❑ To switch off, press ⇒ Item 17 (page 78) .
- ❑ Because the flaps remain in the last position set, this means of selection should only be used in special circumstances e.g. when there is a malfunction.

9 - Button for automatic mode

10 - Dash panel temperature sensor -G56- and temperature sensor blower -V42-

- ❑ Installation location for right-hand drive vehicles.

Protected by copyright. Copyright by Volkswagen AG. Volkswagen AG does not guarantee or accept any liability with respect to the correctness of information in this document. Copyright by Volkswagen AG. Reproduction or publication in whole or in part is not permitted unless authorised by Volkswagen AG.
satelettronica

11 - “ECON” button

- ❑ In ECON mode, only the air conditioner compressor is switched off; heating and ventilation continue to be controlled automatically.

12 - Button for “Warmer”

13 - Button for “Colder”

14 - Button for “Air flow to footwell”

15 - Button for “Air flow to upper body”

16 - Button to increase blower speed

17 - Button

- ❑ To reduce blower speed.
- ❑ To switch off air conditioning system: press and hold button down until “OFF” appears in display.
- ❑ Because the flaps remain in the last position set, this means of selection should only be used in special circumstances e.g. when there is a malfunction.

18 - Button for fresh air and air recirculation

19 - Dash panel temperature sensor -G56- and temperature sensor blower -V42-

- ❑ Installation position for left-hand drive vehicles.

4.2 Connectors on Climatronic control unit - J255-

4.2.1 Pin assignment for multi-pin connectors A, B, C and D on back of Climatronic control unit

© Volkswagen AG does not guarantee or accept any liability with respect to the correctness of information in this document. Copyright by Volkswagen AG.
Protected by copyright. Copying for private or commercial purposes, in part or in whole is not permitted unless authorised by Volkswagen AG.

12-pin connector, connector housing -A-

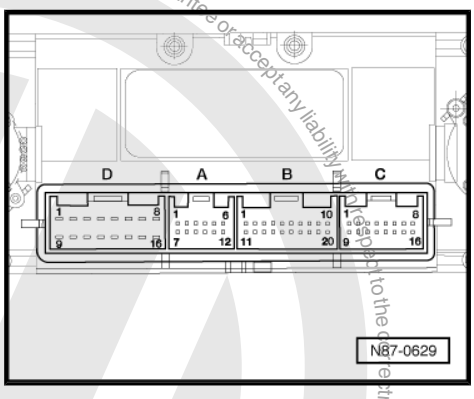

1 - K line, diagnosis

5 - Dim voltage 58 d

7 - Fresh air intake duct temperature sensor -G89-

8 - Ambient temperature sensor -G17-

9 - Sunlight penetration photosensor -G107-

12 - Signal earth, control motors

20-pin connector, connector housing -B-

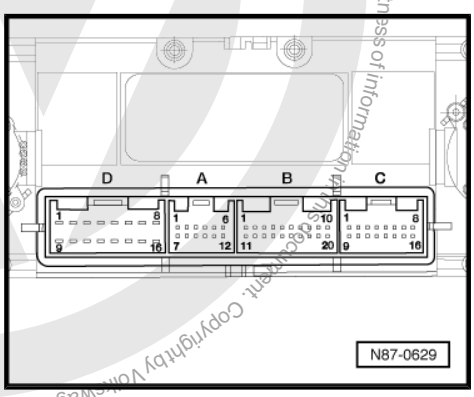

1 - Ambient temperature for estate

5 - Footwell vent temperature sender -G192-

6 - Centre vent temperature sender -G191-

7 - Evaporator output temperature sender -G263-

8 - Temperature flap control motor potentiometer -G92-

9 - Central flap control motor potentiometer -G112-

10 - Footwell/defroster flap control motor potentiometer -G114-

14 - Temperature increase off/ PTC off

17 - Air flow flap control motor potentiometer -G113-

satelettronica

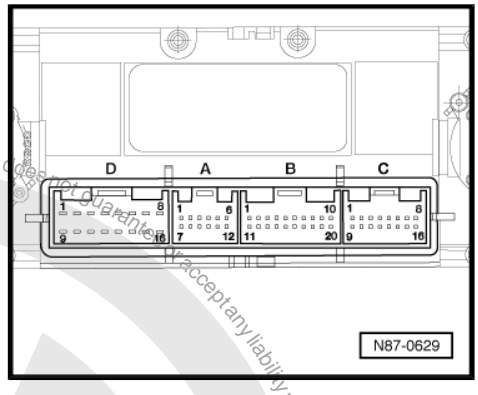

16-pin connector, connector housing -C-

2 - Diagnosis 2/32 bar (high-pressure side)

4 - Speed signal

6 - Engine speed

8 - + 5V 10 mA for control motors

11 - Fresh air blower -V2- (-)

12 - Engine electronics, bidirectional

14 - Fresh air blower -V2- (+)

15 - Wiring harness control for VW (internal)

16 - Fresh air blower control unit -J126- , activation

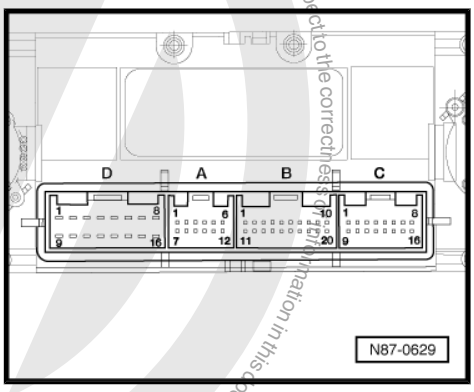

16-pin connector, connector housing -D-

1 - Auxiliary heating

2 - Temperature flap control motor -V68-

3 - Footwell and defroster flap control motor -V85-

4 - Central flap control motor -V70-

5 - Air flow flap control motor -V71-

6 - Air conditioning system compressor regulating valve -N280- , externally regulated air conditioner compressor

7 - Terminal 30 (optional)

8 - Magnetic coupling/ fan speed 2

9 - Terminal 15 for 2-way valve relay for coolant shut-off valve -J585-

10 - Temperature flap control motor -V68-

11 - Footwell and defroster flap control motor -V85-

12 - Central flap control motor -V70-

13 - Air flow flap control motor -V71-

14 - Terminal 31

15 - Radiator fan control unit -J293-

4.3 Climatronic - passenger compartment

4.3.1 Before beginning repair work, perform the following steps:

– Switch off all electrical consumers.

– Switch off ignition.

– Pull out ignition key.

Special tools and workshop equipment required

Protected by copyright. Copyright by Volkswagen AG.
Copyright by Volkswagen AG. Volkswagen AG does not guarantee or accept any liability with respect to the correctness of information in this document. Copyright by Volkswagen AG.
Reproduction, in whole or in part, for all purposes, is not permitted unless authorised by Volkswagen AG.
satelettronica

♦ Air conditioning service station -VAS 6007A-

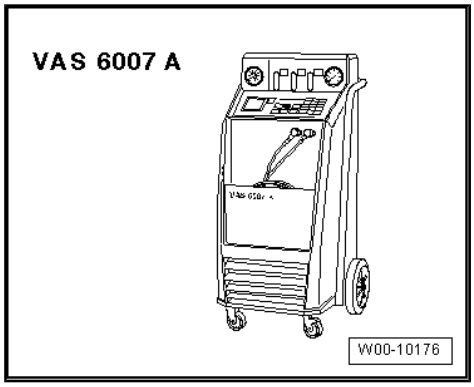

Note

*Parts marked * can be repaired only in workshops with suitable equipment and specially trained mechanics because the refrigerant must be evacuated beforehand using, for example, the air conditioning service station -VAS 6007A- .*

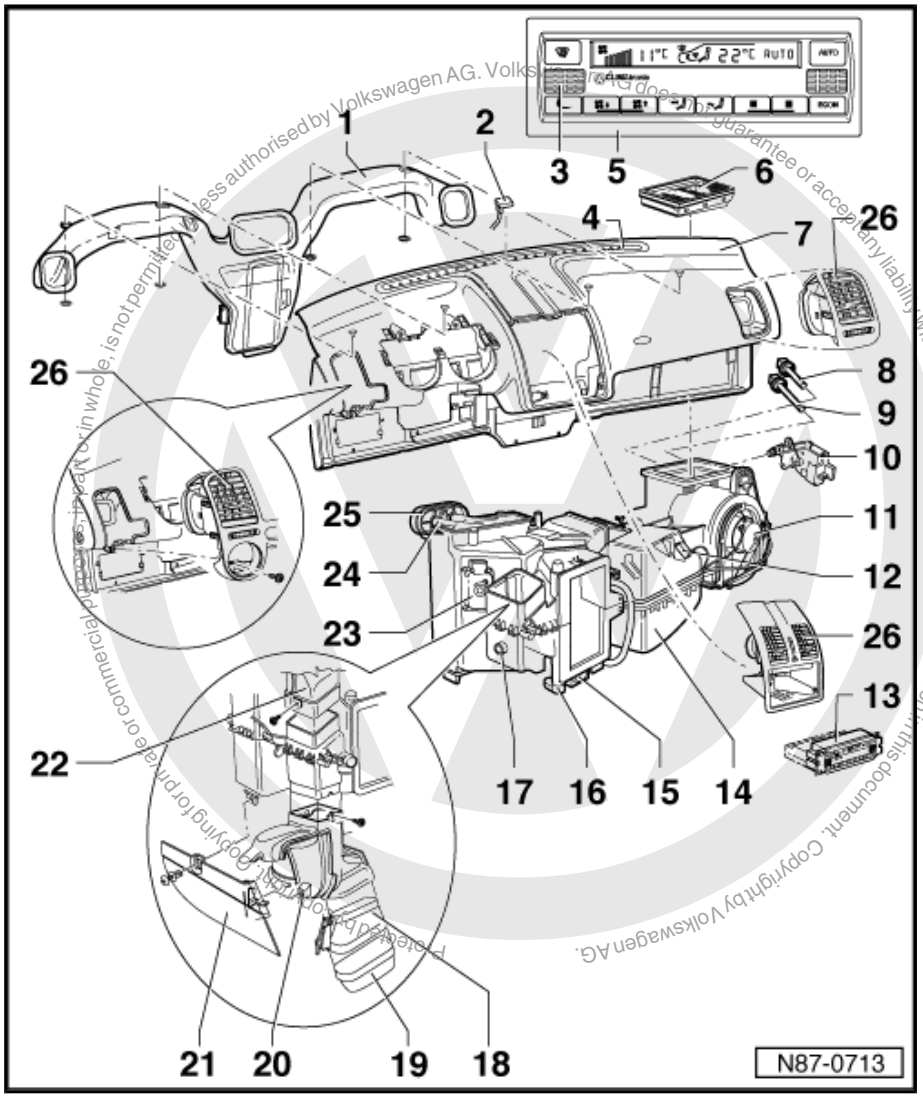

1 - Air duct

2 - Sunlight penetration photo-sensor -G107-

- ❑ Function: controls temperature flap and fresh air blower depending on light intensity
- ❑ In event of failure: control unit -J255- assumes fixed value.
- ❑ Checking: with diagnosis functions of vehicle diagnosis, testing and information system - VAS 5051A- or vehicle diagnosis and service information system - VAS 5052- .
- ❑ Removing ⇒ page 84 .

3 - Dash panel temperature sensor -G56- with temperature sensor blower -V42-

- ❑ The Climatronic control unit -J255- , the operating and display unit for Climatronic air conditioning system -E87- and the dash panel temperature sensor -G56- with temperature sensor blower -V42- are combined in one unit which cannot be dismantled.
- ❑ Checking: with diagnosis functions of vehicle diagnosis, testing and information system - VAS 5051A- or vehicle diagnosis and service information system -VAS 5052- .
- ❑ Function: temperature sensor controls temperature flap and fresh air blower, depending on temperature.

satelettronica

- In event of dash panel temperature sensor -G56- failure: continued operation assuming value of +24°.
- Renewing and adjusting:“code control unit 07” with vehicle diagnosis, testing and information system -VAS 5051A- or vehicle diagnosis and service information system -VAS 5052- ⇒ page 9 and then initiate “basic setting 04” ⇒ page 6 .

4 - Defrosting vent

5 - Operating and display unit for Climatronic air conditioning system -E87-

- The Climatronic control unit -J255- , the operating and display unit for Climatronic air conditioning system -E87- and the dash panel temperature sensor -G56- with temperature sensor blower -V42- are combined in one unit which cannot be dismantled.
- Checking: with diagnosis functions of vehicle diagnosis, testing and information system -VAS 5051A- or vehicle diagnosis and service information system -VAS 5052- .
- Operation and function ⇒ page 76 .
- Removing and installing ⇒ page 85 .
- Renewing and adjusting:“code control unit 07” with vehicle diagnosis, testing and information system -VAS 5051A- or vehicle diagnosis and service information system -VAS 5052- ⇒ page 9 and then initiate “basic setting 04” ⇒ page 6 .

6 - Dust and pollen filter

- With active charcoal filter.
- Removing and installing ⇒ page 37 .

7 - Dash panel

- Removing and installing ⇒ Rep. Gr. 70 .

8 - Vent on front passenger side

- Removing and installing ⇒ page 39 .

9 - Fresh air intake duct temperature sensor -G89-

- With seal.
- Function: temperature sensor controls temperature flap and fresh air blower, depending on temperature.
- In event of failure: ambient temperature sensor -G17- takes over the function.
- Checking: with diagnosis functions of vehicle diagnosis, testing and information system -VAS 5051A- or vehicle diagnosis and service information system -VAS 5052- .
- To renew, remove dash panel ⇒ Rep. Gr. 70 .
- Turn temperature sensor 90° and pull out.
- Moisten rubber seal with oil when installing.

10 - Evaporator output temperature sender -G263-

- Only in vehicles with externally regulated air conditioner compressor.
- Checking: with diagnosis functions of vehicle diagnosis, testing and information system -VAS 5051A- or vehicle diagnosis and service information system -VAS 5052- .
- With seal.
- To renew: remove glove box ⇒ Rep. Gr. 68 .
- Turn temperature sensor 90° and pull out.
- Moisten rubber seal with oil when installing.

11 - Air flow flap control motor -V71-

- Operates simultaneously fresh air and air recirculation flap.
- Checking: with diagnosis functions of vehicle diagnosis, testing and information system -VAS 5051A- or vehicle diagnosis and service information system -VAS 5052- .
- Removing ⇒ page 86 .
- Renewing and adjusting:“code control unit 07” with vehicle diagnosis, testing and information system -VAS 5051A- or vehicle diagnosis and service information system -VAS 5052- ⇒ page 9 and then initiate “basic setting 04” ⇒ page 6 .

12 - Fresh air blower -V2-

- Checking: with diagnosis functions of vehicle diagnosis, testing and information system -VAS 5051A- or vehicle diagnosis and service information system -VAS 5052- .
- Removing ⇒ page 84 .

Protected by copyright. Copyright by Volkswagen AG. Volkswagen AG does not guarantee or accept any liability with respect to the correctness of information in this document. Copyright by Volkswagen AG.
satelettronica

13 - Fresh air blower control unit -J126-

- ❑ Task: continuously variable control of fresh air blower speed depending on voltage.
- ❑ Checking: with diagnosis functions of vehicle diagnosis, testing and information system -VAS 5051A- or vehicle diagnosis and service information system -VAS 5052- .
- ❑ Removing ⇒ page 84 .

14 - Central vents

- ❑ Removing ⇒ page 38 .

15 - Climatronic control unit -J255-

- ❑ The Climatronic control unit -J255- , the operating and display unit for Climatronic air conditioning system -E87- and the dash panel temperature sensor -G56- with temperature sensor blower -V42- are combined in one unit which cannot be dismantled.
- ❑ Checking: with diagnosis functions of vehicle diagnosis, testing and information system -VAS 5051A- or vehicle diagnosis and service information system -VAS 5052- .
- ❑ Removing and installing ⇒ page 85 .
- ❑ Renewing and adjusting:“code control unit 07” with vehicle diagnosis, testing and information system -VAS 5051A- or vehicle diagnosis and service information system -VAS 5052- ⇒ page 9 and then initiate “basic setting 04” ⇒ page 6 .

16 - Heater and air conditioner*

- ❑ With heat exchanger.
- ❑ With evaporator.
- ❑ Removing ⇒ page 135 .

17 - Central flap control motor -V70-

- ❑ Checking: with diagnosis functions of vehicle diagnosis, testing and information system -VAS 5051A- or vehicle diagnosis and service information system -VAS 5052- .
- ❑ Removing ⇒ page 89 .
- ❑ Renewing and adjusting:“code control unit 07” with vehicle diagnosis, testing and information system -VAS 5051A- or vehicle diagnosis and service information system -VAS 5052- ⇒ page 9 and then initiate “basic setting 04” ⇒ page 6 .

18 - Temperature flap control motor -V68-

- ❑ Checking: with diagnosis functions of vehicle diagnosis, testing and information system -VAS 5051A- or vehicle diagnosis and service information system -VAS 5052- .
- ❑ Removing ⇒ page 88 .
- ❑ Renewing and adjusting:“code control unit 07” with vehicle diagnosis, testing and information system -VAS 5051A- or vehicle diagnosis and service information system -VAS 5052- ⇒ page 9 and then initiate “basic setting 04” ⇒ page 6 .

19 - Footwell vent temperature sender -G192-

- ❑ Function: controls air distribution between defroster and footwell and the fresh air blower speed dependent upon the vent temperature.
- ❑ Emergency running in event of failure: continued operation assuming water temperature of +80° C.
- ❑ Checking: with diagnosis functions of vehicle diagnosis, testing and information system -VAS 5051A- or vehicle diagnosis and service information system -VAS 5052- .
- ❑ Removing and installing ⇒ page 83 .

20 - Connecting piece

21 - Cover

22 - Footwell vent

- ❑ Removing vent ⇒ page 28 .

23 - Footwell system

24 - Intermediate piece, defrost

- ❑ To renew, remove dash panel ⇒ Rep. Gr. 70 .

satelettronica

25 - Footwell and defroster flap control motor -V85-

- ❑ Checking: with diagnosis functions of vehicle diagnosis, testing and information system -VAS 5051A- or vehicle diagnosis and service information system -VAS 5052- .
- ❑ Removing ⇒ page 89 .
- ❑ Renewing and adjusting:“code control unit 07” with vehicle diagnosis, testing and information system -VAS 5051A- or vehicle diagnosis and service information system -VAS 5052- ⇒ page 9 and then initiate “basic setting 04” ⇒ page 6 .

26 - Heat exchanger*

- ❑ Removing ⇒ page 138 .

27 - Heat exchanger/bulkhead seal*

- ❑ Removal ⇒ page 138 , Dismantling and assembling evaporator housing.
- ❑ Note installation position ⇒ page 47 .

28 - Vent on driver side

- ❑ Removing and installing ⇒ page 40 .

4.4 Removing and installing footwell vent temperature sender -G192-

4.4.1 Removing

– Remove driver side footwell cover ⇒ Rep. Gr. 68 .

– Remove centre console ⇒ Rep. Gr. 68 .

– Pull connector off footwell vent temperature sender -G192- .

– Turn footwell vent temperature sensor -G192- -1- 90° and remove it from housing -2-.

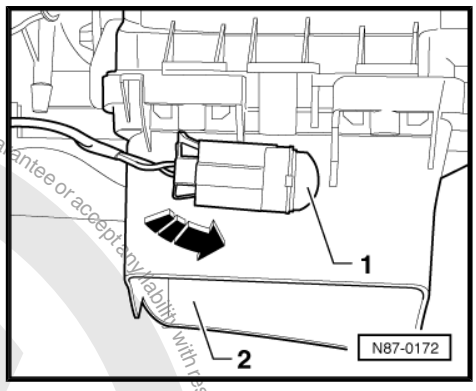

4.4.2 Installing

Install in reverse order.

– When installing, moisten rubber seal on footwell vent temperature sender -G192- with oil.

Protected by copyright. Copying for private or commercial purposes, in part or in whole, is not permitted unless authorised by Volkswagen AG. Volkswagen AG does not guarantee or accept any liability with respect to the correctness of information in this document. Copyright by Volkswagen AG.
satelettronica

4.5 Removing sunlight penetration photo-sensor -G107-

4.5.1 Removing

– Use a screwdriver to unclip trim -2- above sunlight penetration photosensor -G107- along side -1-.

– Use a screwdriver to unclip sunlight penetration photosensor -G107- -1- along side.

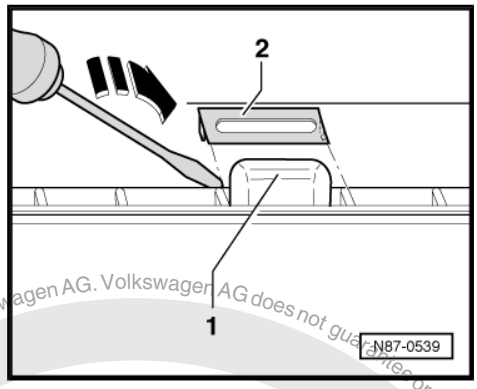

4.6 Removing fresh air blower control unit -J126-

4.6.1 Removing

– Remove glove box ⇒ Rep. Gr. 68 .

– Pull out connector -2- and remove bolt -3-.

– Remove fresh air blower control unit -J126- -1-.

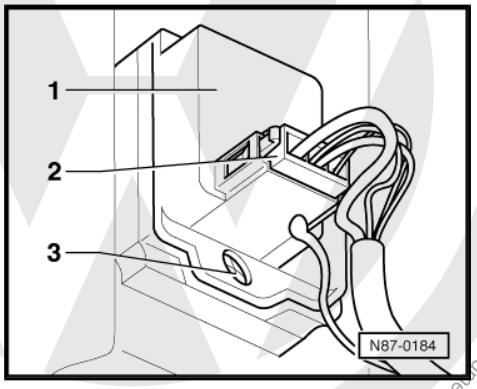

4.7 Removing fresh air blower -V2-

1 - Heating

2 - Fresh air blower -V2-

3 - Cover

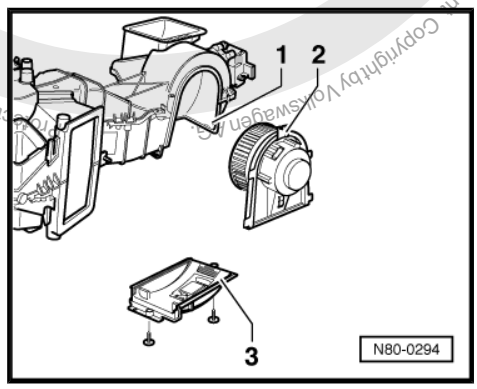

4.7.1 Removing

– Remove driver side footwell cover ⇒ Rep. Gr. 68 .

– Remove centre console ⇒ Rep. Gr. 68 .

– Remove glove box ⇒ Rep. Gr. 68 .

Copyright by Volkswagen AG. Volkswagen AG does not guarantee or accept any liability with respect to the correctness of information in this document. Copyright by Volkswagen AG. Reproduced by copyright. Copying for private or commercial purposes, in part or in whole, is not permitted unless authorised by Volkswagen AG.
satelettronica

– Remove plastic foam cover -3- below the air conditioning unit.
– Remove bolts -1-.
– Remove cover -item 2-.

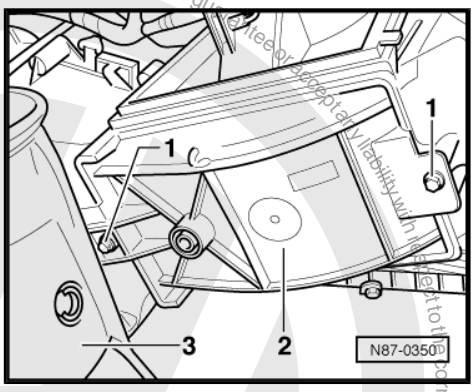

– Pull connector -1- off fresh air blower.
– Pull fresh air blower -2- out downwards.

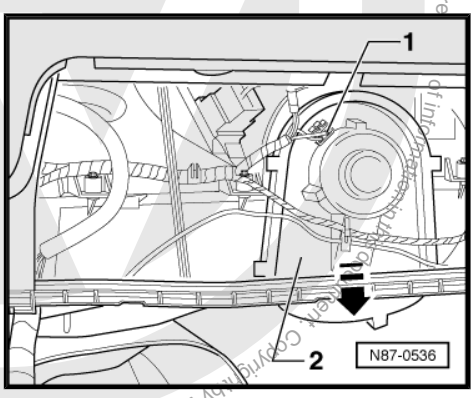

4.8 Removing and installing operating and display unit for Climatronic air conditioning system -E87- with Climatronic control unit -J255-

4.8.1 Before beginning repair work, perform the following steps:

– Switch off all electrical consumers.
– Switch off ignition.
– Pull out ignition key.

Note

The Climatronic control unit -J255- and the operating and display unit for Climatronic air conditioning system -E87- are a single component which cannot be dismantled.

satelettronica

4.8.2 Removing

– Unclip trim for operating and display unit for Climatronic air conditioning system -E87- with a screwdriver and a pad -arrows-.

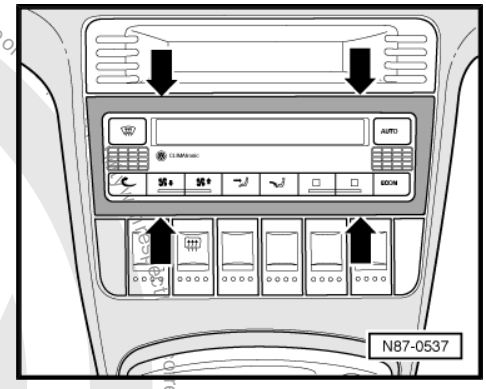

– Remove bolts -arrows- from instrument panel trim.

– Pull out operating and display unit for Climatronic air conditioning system -E87- with Climatronic control unit -J255- .

– Release connectors and pull off.

– Pull out and remove operating and display unit for Climatronic air conditioning system -E87- with Climatronic control unit -J255- .

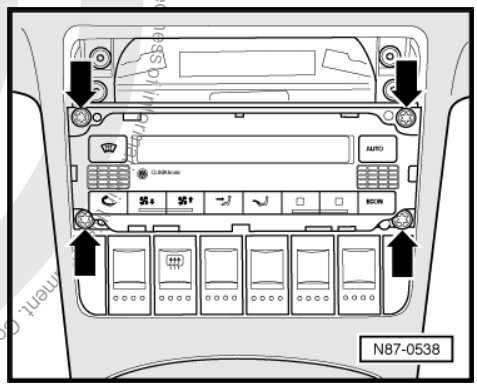

4.8.3 Installing and adjusting

– “Code control unit 07” with vehicle diagnosis, testing and information system -VAS 5051A- or vehicle diagnosis and service information system -VAS 5052- ⇒ page 9 and then initiate “basic setting 04” ⇒ page 6 .

4.9 Removing and installing air flow flap control motor -V71-

4.9.1 Before beginning repair work, perform the following steps:

– Switch off all electrical consumers.

– Switch off ignition.

– Pull out ignition key.

Note

- *The air flow flap control motor also operates the fresh air and air recirculation flap.*
- *When installing control motor, ensure that wires are correctly routed. They should be routed so that they do not come into contact with moving parts (for example the levers on the control motors).*
- *After installing a new control motor, perform function “Basic settings 04”* *⇒ page 6* *.*

satelettronica

Protected by copyright. Copyright by Volkswagen AG. Volkswagen AG does not guarantee or accept any liability with respect to the correctness of information in this document. Copying for private or commercial purposes, in part or in whole, is not permitted unless authorised by Volkswagen AG.

4.9.2 Removing

– Remove dash panel ⇒ Rep. Gr. 70 .

– Remove heater unit with evaporator.

– Carefully unclip air flow flap operating rod -1- from lever -2- using a screwdriver.

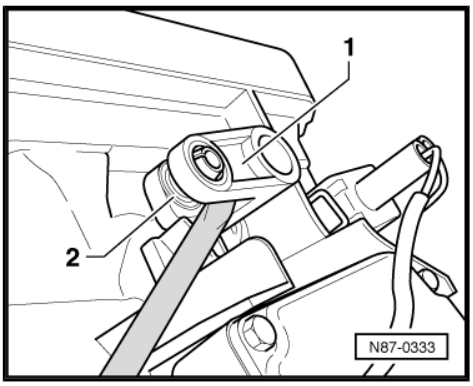

– Pull off connector -1-.

– Remove securing bolts -3-.

The control motor is to be guided into the distribution box and evaporator housing. To prevent damage:

– Lower control motor and simultaneously pull from shaft for fresh air and air recirculation flap -2-, -arrow A-.

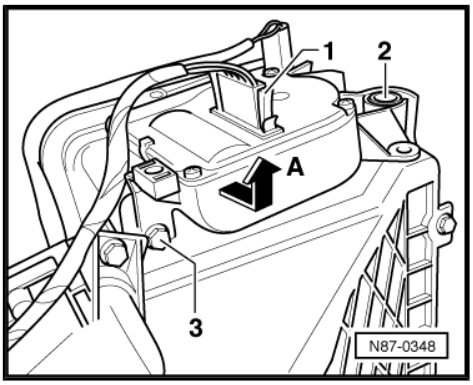

4.9.3 Installing

– Insert control motor in shaft of fresh air and air recirculation flap -1-.

– Turn control motor in direction of -arrow A- and tighten bolts.

– Clip in operating rod for air flow flap.

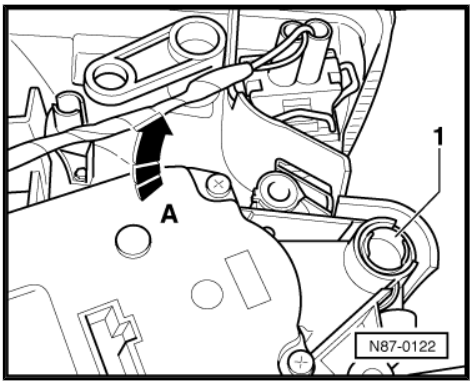

– Push connector -1- onto control motor-2-.

– “Code control unit 07” with vehicle diagnosis, testing and information system -VAS 5051A- or vehicle diagnosis and service information system -VAS 5052- ⇒ page 9 and then initiate “basic setting 04” ⇒ page 6 .

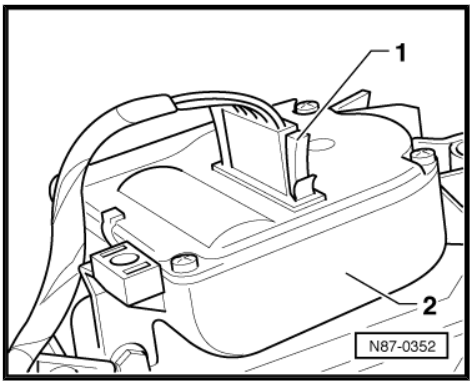

satelettronica

4.10 Removing and installing temperature flap control motor -V68-

4.10.1 Before beginning repair work, perform the following steps:

– Switch off all electrical consumers.

– Switch off ignition.

– Pull out ignition key.

Note

♦ *When installing control motor, ensure that wires are correctly routed. They should be routed so that they do not come into contact with moving parts (for example the levers on the control motors).*

♦ *After installing a new control motor, perform function "Basic settings 04"* ⇒ page 6 .

4.10.2 Removing

– Remove glove box ⇒ Rep. Gr. 68 .

– Remove driver side footwell cover ⇒ Rep. Gr. 68 .

– Remove centre console ⇒ Rep. Gr. 68 .

– Remove support bracket.

– Remove connecting piece.

– Pull off connector -1-.

– Carefully unclip operating rod -2- from lever -arrow A- using a screwdriver.

– Remove securing bolts -4-.

– Remove control motor -3-.

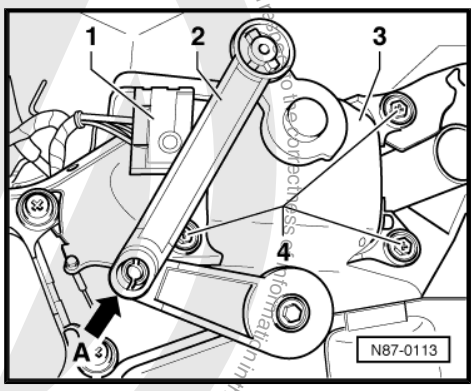

4.10.3 Installing and adjusting

– Initiate "basic setting 04" using vehicle diagnosis, testing and information system -VAS 5051A- or vehicle diagnosis and service information system -VAS 5052- ⇒ page 6 .

Protected by copyright. Copyright by Volkswagen AG. Volkswagen AG does not guarantee or accept any liability with respect to the correctness of information in this document. Copyright by Volkswagen AG.
Reproduction for private or commercial purposes, in part or whole, is not permitted unless authorised by Volkswagen AG.
satelettronica

4.11 Removing and installing central flap control motor -V70-

Note

- *When installing control motor, ensure that wires are correctly routed. They should be routed so that they do not come into contact with moving parts (for example the levers on the control motors).*
- *After installing a new control motor, perform function "Basic settings 04"* ⇒ page 6 .

4.11.1 Removing

– Remove centre console ⇒ Rep. Gr. 68 .
– Remove glove box ⇒ Rep. Gr. 68 .
– Remove driver side footwell cover ⇒ Rep. Gr. 68 .
– Remove support bracket.
– Remove connecting piece.
– Pull off connector -1-.
– Carefully unclip operating rod -2- from lever -arrow A- using a screwdriver.
– Remove securing bolts -3-.
– Turn operating rod -2- and remove control motor -4-.
– Remove control motor.

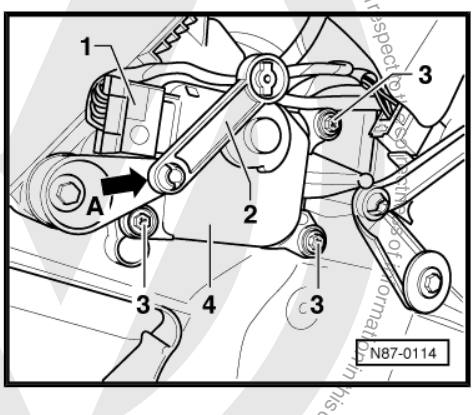

4.11.2 Installing and adjusting

– Initiate "basic setting 04" using vehicle diagnosis, testing and information system -VAS 5051A- or vehicle diagnosis and service information system -VAS 5052- ⇒ page 6 .

4.12 Removing and installing footwell and defroster flap control motor -V85-

4.12.1 Removing

– Remove centre console ⇒ Rep. Gr. 68 .
– Remove driver side footwell cover ⇒ Rep. Gr. 68 .

satelettronica

– Pull off connector -1-.
– Remove securing bolts -3-.
– Turn control motor -4- and remove from operating rod -2-.
– Remove control motor -4- from housing.

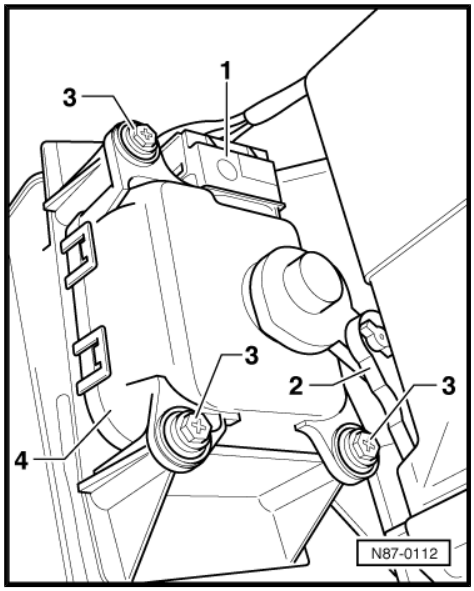

4.12.2 Installing and adjusting

– Initiate “basic setting 04” using vehicle diagnosis, testing and information system -VAS 5051A- or vehicle diagnosis and service information system -VAS 5052- ⇒ page 6 .

4.13 Climatronic - engine compartment

Note

Parts marked “” can be repaired only in workshops with suitable equipment and specially trained mechanics because the refrigerant must be evacuated beforehand using, for example, the air conditioning service station -VAS 6007A- .*

Protected by copyright. Copying for private or commercial purposes, in part or in whole, is not permitted unless authorised by Volkswagen AG. Volkswagen AG does not guarantee or accept any liability with respect to the correctness of information in this document. Copyright by Volkswagen AG.
satelettronica

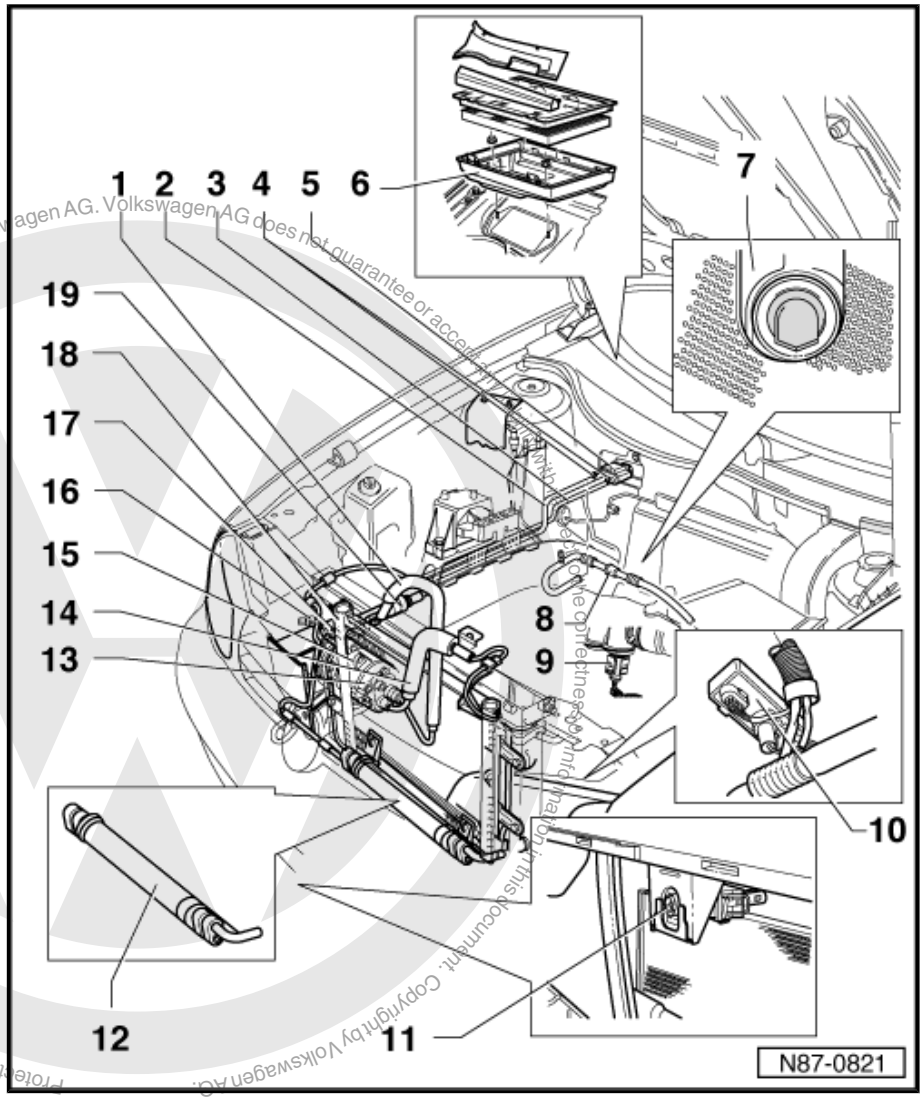

1 - Refrigerant hose*

- ❑ From expansion valve to air conditioner compressor.
- ❑ With damper.

2 - Refrigerant line*

3 - Refrigerant hose*

- ❑ From expansion valve to receiver with dryer bag.

4 - Evacuating and charging valve*

- ❑ Releasing refrigerant into the environment is a punishable offence.

5 - Expansion valve*

6 - Dust and pollen filter

- ❑ With active charcoal filter.
- ❑ Removing and installing ⇒ page 37 .

7 - Water drain valve

- ❑ Checking ⇒ page 94 .

8 - Quick release coupling

- ❑ Removing and installing ⇒ page 129 .
- ❑ Not present with all types of engines.

9 - Coolant temperature sender -G62-

- ❑ Coolant temperature sender -G62- switches off air conditioning system magnetic coupling -N25- when the coolant temperature is too high (off at 119°, on at 112°).
- ❑ Removing and installing ⇒ page 92 .

10 - Radiator fan control unit -J293-

11 - Ambient temperature sensor -G17-

- ❑ Function: temperature sensor controls temperature flap and fresh air blower, depending on temperature.
- ❑ Emergency operation during failure: fresh air intake duct temperature sensor -G89- takes over the function. If both sensors are defective, operation continues with an assumed value of +10° C. Air recirculation is not possible. The control and display unit for Climatronic air conditioning system -E87- displays “--”.
- ❑ Removing ⇒ page 94 .

12 - Receiver with dryer bag*

- ❑ Functions ⇒ page 129 .

13 - High-pressure safety valve*

- ❑ Checking ⇒ page 75 .

14 - Refrigerant hose*

- ❑ From air conditioner compressor to condenser.

15 - Air conditioner compressor*

- ❑ Manufacturer: Sanden, designation: SD6-V12

satelettronica

16 - High pressure sender -G65-

- ❑ Removing ⇒ page 93 .
- ❑ Torque setting: 8 Nm
- ❑ Renew O-ring (note part number).
- ❑ The high pressure sender -G65- can be removed without extracting the refrigerant from the refrigerant circuit.
- ❑ The high pressure sensor -G65- supplies information to radiator fan control unit -J293- and engine control unit.

Function:

- ❑ Switches radiator fan -V7- to next higher speed when pressure increases in refrigerant circuit.
- ❑ The high pressure sender -G65- cannot be checked via the Climatronic self-diagnosis, but only via the engine control unit self-diagnosis.
- ❑ Check high pressure sender -G65- ⇒ page 132 .
- ❑ Switches off the air conditioner when the pressure is high (for example, insufficient engine cooling).
- ❑ Switches off the air conditioner when the pressure is too low (for example, loss of refrigerant).

17 - Air conditioning system magnetic coupling -N25-

- ❑ Repairing ⇒ page 104 .

18 - Condenser*

19 - Damper*

- ❑ In refrigerant hose from expansion valve to air conditioner compressor.

4.14 Removing and installing coolant temperature sender -G62-

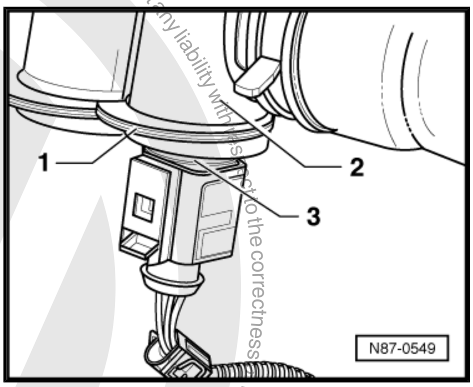

1 - Clip

2 - Thermostat housing

3 - Coolant temperature sender -G62-

4.14.1 Function of coolant temperature sender -G62-

Depending on the signal from the coolant temperature sender -G62- , the engine control unit does the following via radiator fan control unit -J293- :

- ♦ It switches on the air conditioning system magnetic coupling -N25- .
- ♦ It switches off the air conditioning system magnetic coupling -N25- .

4.14.2 Removing

– Pull connector off coolant temperature sender -G62- .

Protected by copyright. Copying for private or commercial purposes, in part or in whole, is not permitted unless authorised by Volkswagen AG. Volkswagen AG does not guarantee or accept any liability with respect to the correctness of information in this document. Copyright by Volkswagen AG.
satelettronica

WARNING

Danger of scalding injuries.

The cooling system is pressurised. When the engine is warm, the coolant temperature may be above 100° C.

If necessary, release pressure before carrying out repairs.

– Remove clip -1- from thermostat housing -2-.
– Pull out coolant temperature sender -G62- -3-.

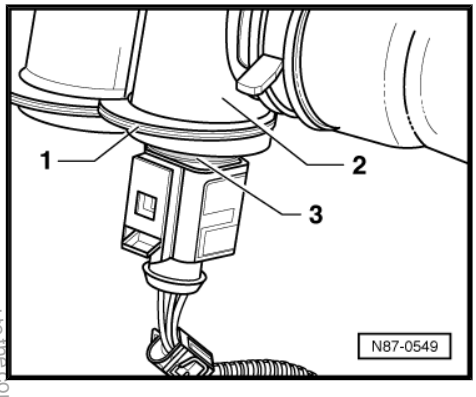

Note

- *The coolant temperature sender -G62- supplies information to the engine control unit.*
- *The coolant temperature sender -G62- can only be checked via engine control unit self-diagnosis.*
- *The coolant temperature sender -G62- is checked via self-diagnosis using the vehicle diagnosis, testing and information system -VAS 5051A- or the vehicle diagnosis and service information system -VAS 5052- ⇒ Rep. Gr. 01 .*

4.14.3 Installing

Install in reverse order.

Note

Refill with coolant after installing thermal switch ⇒ Rep. Gr. 19 .

4.15 Removing high pressure sender -G65-

Note

The high pressure sender -G65- can be removed without extracting the refrigerant from the refrigerant circuit.

– Pull off connector -1-.
– Unbolt high pressure sender -2-.
– Renew seal.

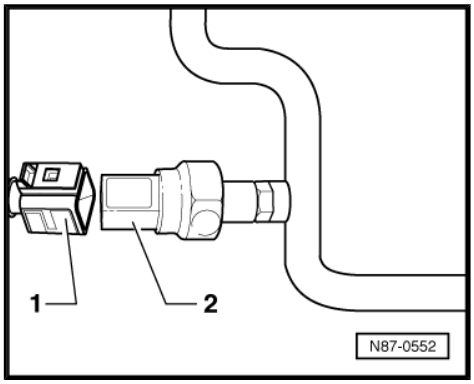

Protected by copyright. Copyright by Volkswagen AG. Volkswagen AG does not guarantee or accept any liability with respect to the correctness of information in this document. Copyright by Volkswagen AG. Unauthorised use or commercial purposes, in part or in whole, is not permitted unless authorised by Volkswagen AG.
satelettronica

4.16 Checking water drain valve

4.16.1 Checking

– Fold cover flap -1- in heat insulation mat -3- on the bulkhead -4- upwards.

– Remove water drain valve -2- from bulkhead -4-.

Check water drain valve as follows to ensure that it functions correctly:

- The water drain valve must not be stuck together.
- The heat insulation mat must not be deformed or damaged in the area around the water drain valve.
- The opening of the water drain valve flap must point downward.

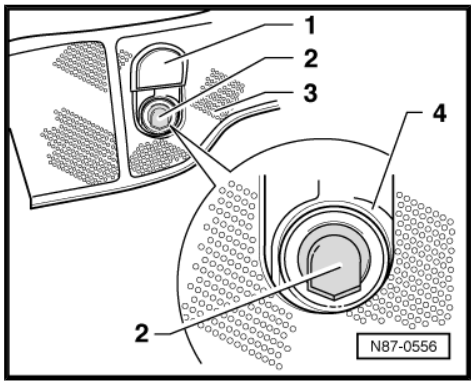

Note

When closing, the cover flap -1- must be flush with the heat insulation mat. If the cover flap -1- is pushed in too far, the water drain valve shutter flap -2- can get stuck.

4.17 Removing ambient temperature sensor -G17-

4.17.1 Removing

– Unclip grille -1- from cover.

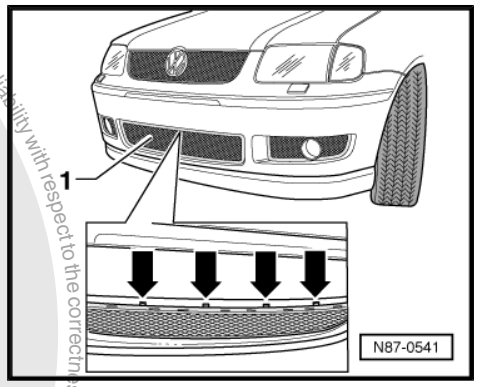

– Pull off connector -2-.

– Unclip temperature sensor -1- from retainer -3-.

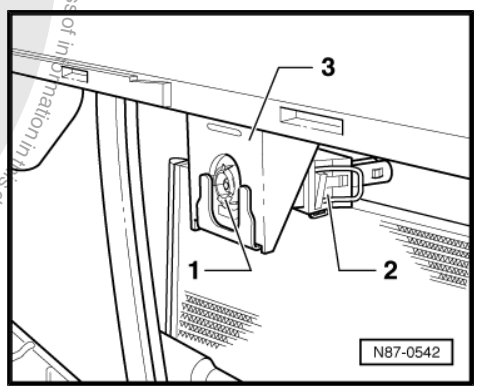

Protected by copyright. Copying for private or commercial purposes, in part or in whole, is not permitted unless authorised by Volkswagen AG. Volkswagen AG does not guarantee or accept any liability with respect to the correctness of information in this document. Copyright by Volkswagen AG.
satelettronica

5 Removing and installing air conditioner compressor

5.1 Removing and installing air conditioner compressor: engine code ADX, AEA, AEE, AEV, AEX, AFH, AHS, AJV, AKV, ANX, APQ, ARC and AVY

Special tools and workshop equipment required

- Torque wrench -V.A.G 1331-

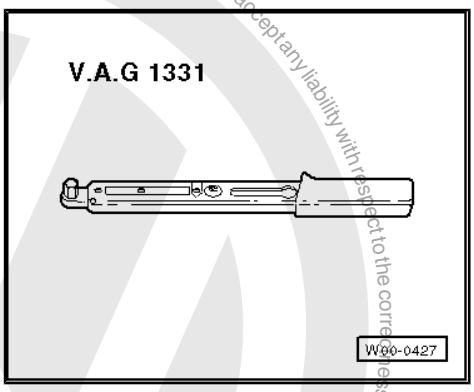

Note

- *Air conditioner compressor bracket and related parts can be removed and installed without opening refrigerant circuit.*
- *To remove poly V-belt ⇒ Rep. Gr. 13 .*

Protected by copyright. Copying for private or commercial purposes, in part or in whole, is not permitted unless authorised by Volkswagen AG. Volkswagen AG does not guarantee or accept any liability with respect to the correctness of information in this document. Copyright by Volkswagen AG.
satelettronica

1 - Bracket for alternator, air conditioner compressor and power steering vane pump

- ♦ Part No. 032 145 169 G
- ♦ Part No. 032 145 169 M

Removing

- Move lock carrier to service position ⇒ Rep. Gr. 50 .
- Remove alternator ⇒ Rep. Gr. 27 .
- Remove power steering vane pump ⇒ Rep. Gr. 48 .
- Remove air conditioner compressor from bracket and secure to body with suitable material (e.g. welding wire) ⇒ page 97 .
- Unbolt bracket from cylinder block.

Installing

When installing, always note:

- Renew securing bolts.
- Observe securing bolts tightening sequence.
- ♦ Tightening sequence: first tighten hexagon bolt ⇒ Item 3 (page 96) , then hexagon bolt ⇒ Item 5 (page 96) and finally hexagon bolts ⇒ Item 2 (page 96) and ⇒ Item 4 (page 96) .

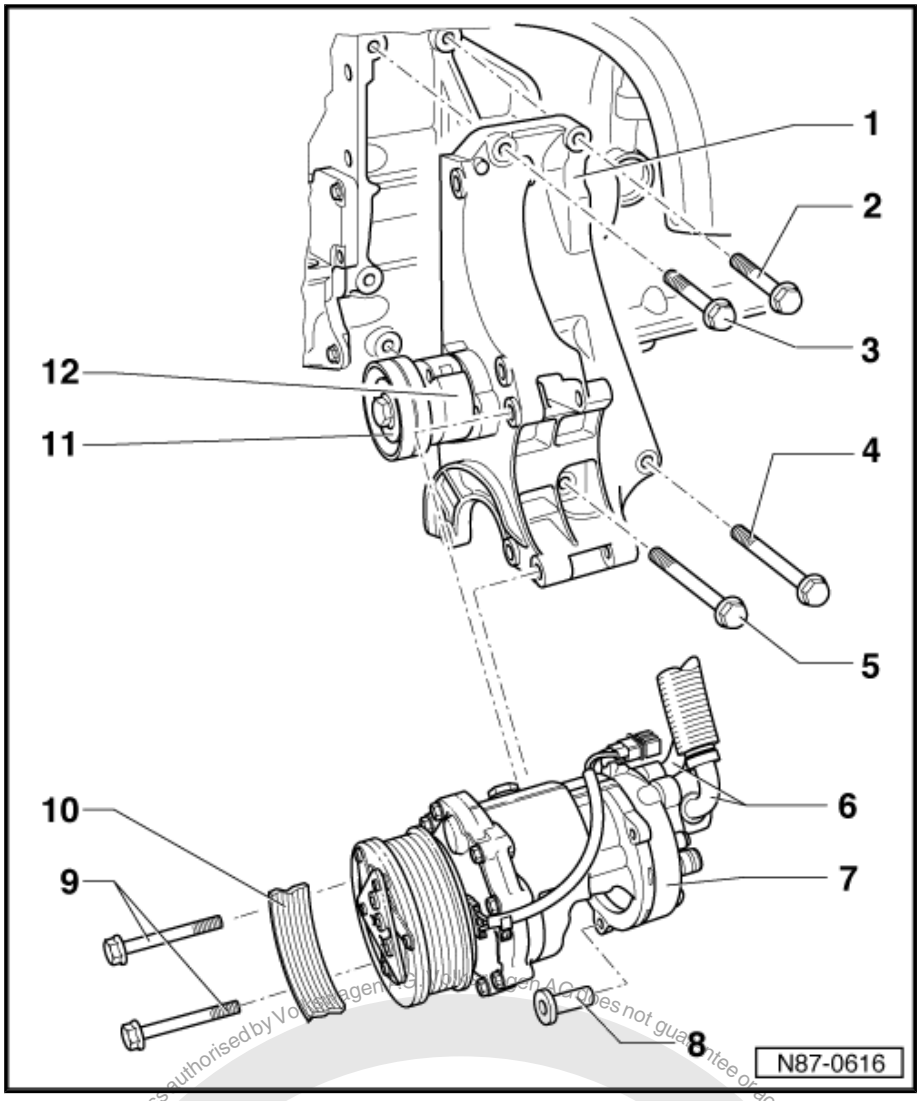

2 - Hexagon bolt M10×50

- ❑ 45 Nm.

3 - Hexagon bolt M10×50

- ❑ 45 Nm.

4 - Hexagon bolt M10×95

- ❑ 45 Nm.

5 - Hexagon bolt M10×95

- ❑ 45 Nm.

6 - Refrigerant hoses

7 - Air conditioner compressor

- ♦ Part number: SD6 V12
- ♦ Part number: SD7 B10

Removing

- Remove power steering vane pump ⇒ Rep. Gr. 48 .
- Unscrew hexagon bolts ⇒ Item 9 (page 97) by a few turns and drive back threaded bush on air conditioner compressor. Continue unscrewing hexagon bolts.
- Remove air conditioner compressor from bracket and secure to body with suitable material (e.g. welding wire) ⇒ page 97 .

Protected by copyright. Copyright by Volkswagen AG. Volkswagen AG does not guarantee or accept any liability with respect to the correctness of information in this document. Copyright by Volkswagen AG. Private commercial purposes, in part or in whole, is not permitted unless authorised by Volkswagen AG.
satelettronica

8 - Bush

- ❑ Always observe during installation: lightly coat sleeve with polycarbamide grease -G 052 142 A2- before installation and then press in.

9 - Hexagon bolt M10×112

- ❑ 45 Nm.

10 - Poly V-belt

- ❑ Removing and installing ⇒ Rep. Gr. 13 .
- ❑ Poly V-belt routing ⇒ page 97 .

11 - Tensioner

12 - Tensioning element for tensioning roller

5.1.1 Securing air conditioner compressor to body

If compressor is removed without opening refrigerant circuit, it should be secured to body using suitable material, for example, welding wire.

When doing this, ensure that refrigerant hoses on air conditioner compressor are not stressed.

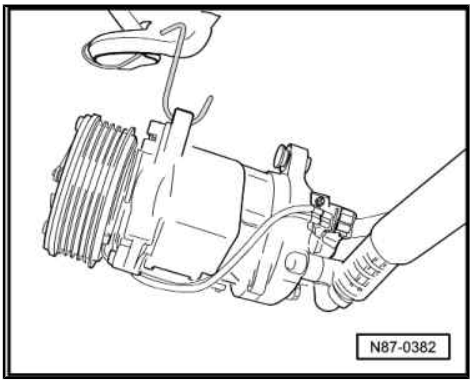

5.1.2 Poly V-belt routing

Note

When installing poly V-belt, ensure that it is correctly seated on poly V-belt pulley.

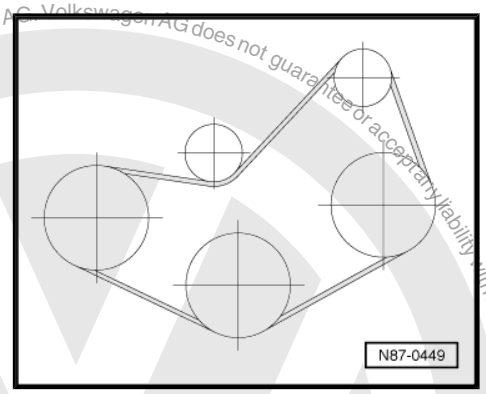

5.2 Removing and installing air conditioner compressor: engine code AER, AFK, AHW, AKK, AKP, ALD, ALL, APE, AUA, AUB, AUC und AUD

Special tools and workshop equipment required

satelettronica
Protected by copyright. Copying for private or commercial purposes, in part or in whole, is not permitted unless authorised by Volkswagen AG. Volkswagen AG does not guarantee or accept any liability with respect to the correctness of information in this document. Copyright by Volkswagen AG.

- Torque wrench -V.A.G 1331-

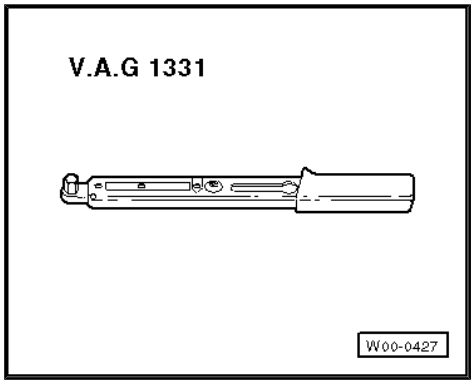

Note

- *Air conditioner compressor bracket and related parts can be removed and installed without opening refrigerant circuit.*
- *To remove poly V-belt ⇒ Rep. Gr. 13 .*

1 - Bracket for alternator, air conditioner compressor and power steering vane pump

- Part No. 032 145 169 G
- Part No. 032 145 169 M

Removing

– Move lock carrier to service position ⇒ Rep. Gr. 50 .
– Remove alternator ⇒ Rep. Gr. 27 .
– Remove power steering vane pump ⇒ Rep. Gr. 48 .
– Remove air conditioner compressor from bracket and secure to body with suitable material (e.g. welding wire) ⇒ page 99 .
– Unbolt bracket from cylinder block.

Installing

When installing, always note:

- Renew securing bolts.
- Observe securing bolts tightening sequence.
- Tightening sequence: first tighten hexagon bolt ⇒ Item 3 (page 99) , then hexagon bolt ⇒ Item 5 (page 99) and finally hexagon bolts ⇒ Item 2 (page 98) and ⇒ Item 4 (page 99) .

2 - Hexagon bolt M10×55

❑ 50 Nm.

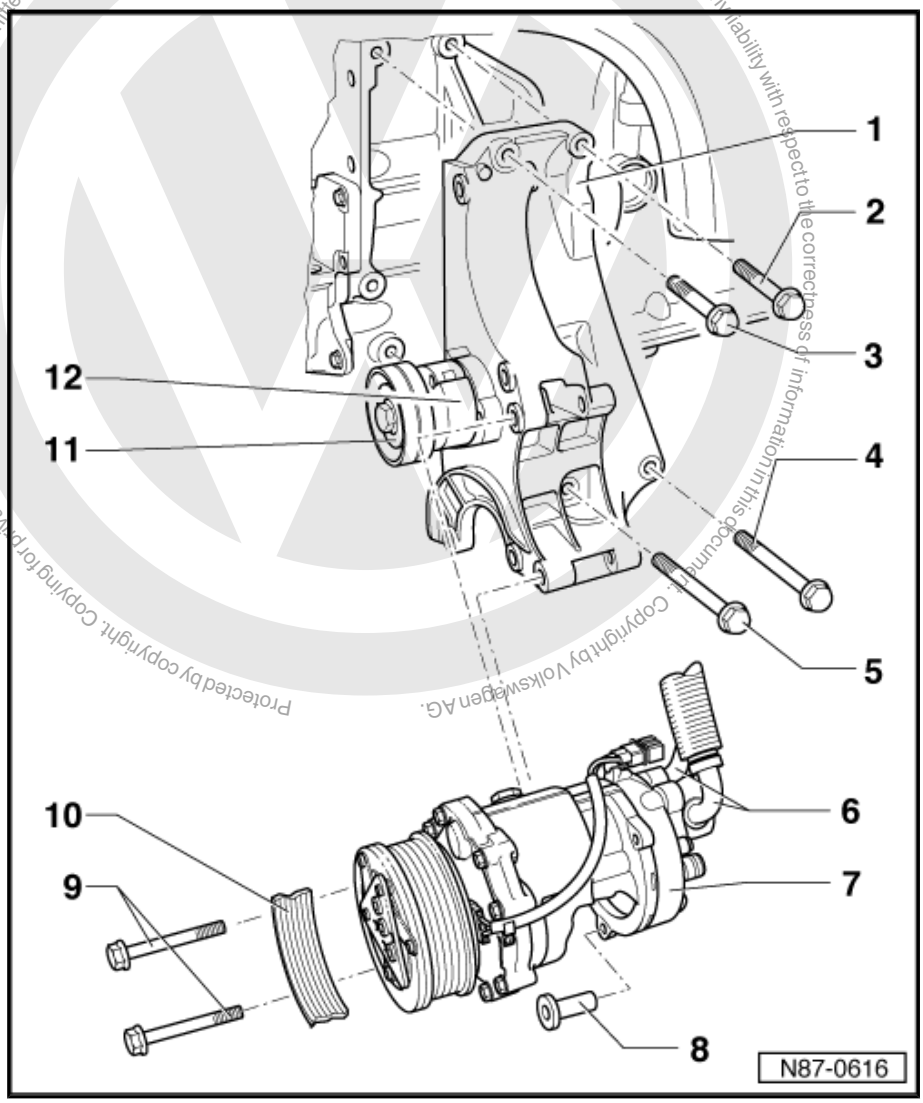

Protected by copyright. Copying for private or commercial purposes, in part or in whole, is not permitted unless authorised by Volkswagen AG. Volkswagen AG does not guarantee or accept any liability with respect to the correctness of information in this document. Copyright by Volkswagen AG.
satelettronica

3 - Hexagon bolt M10×55

- ❑ 50 Nm.

4 - Hexagon bolt M10×100

- ❑ 50 Nm.

5 - Hexagon bolt M10×100

- ❑ 50 Nm.

6 - Refrigerant hoses

7 - Air conditioner compressor

- ♦ Part number: SD6 V12
- ♦ Part number: SD7 B10

Removing

- Remove power steering vane pump ⇒ Rep. Gr. 48 .
- Unscrew hexagon bolts ⇒ Item 9 (page 99) by a few turns and drive back threaded bush on air conditioner compressor. Continue unscrewing hexagon bolts.
- Remove air conditioner compressor from bracket and secure to body with suitable item (e.g. uncoated wire) ⇒ page 99 .

8 - Bush

- ❑ Always observe during installation: lightly coat sleeve with polycarbamide grease -G 052 142 A2- before installation and then press in.

9 - Hexagon bolt M10×112

- ❑ 45 Nm.

10 - Poly V-belt

- ❑ Removing and installing ⇒ Rep. Gr. 13 .
- ❑ Poly V-belt routing ⇒ page 100 .

11 - Tensioner

12 - Tensioning element for tensioning roller

Protected by copyright. Copying for private or commercial purposes, in any form, is not permitted unless authorised by Volkswagen AG. Volkswagen AG does not guarantee or accept any liability with respect to the correctness of information in this document. Copyright by Volkswagen AG.

satelettronica

5.2.1 Securing air conditioner compressor to body

If compressor is removed without opening refrigerant circuit, it should be secured to body using suitable material, for example, welding wire.

When doing this, ensure refrigerant hoses on air conditioner compressor are not stressed.

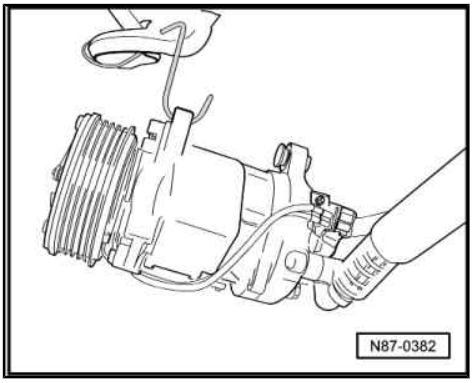

5.2.2 Poly V-belt routing

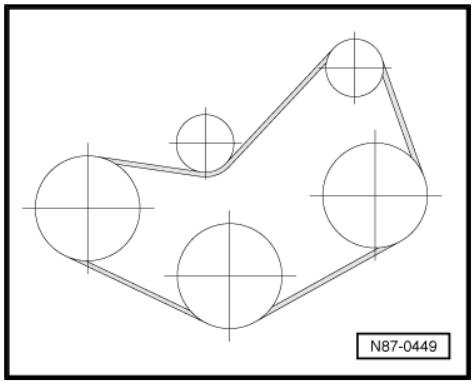

Note

When installing poly V-belt, ensure that it is correctly seated on poly V-belt pulley.

5.3 Removing and installing air conditioner compressor with bracket: engine code AMF and ATL

Special tools and workshop equipment required

- Torque wrench -V.A.G 1331-

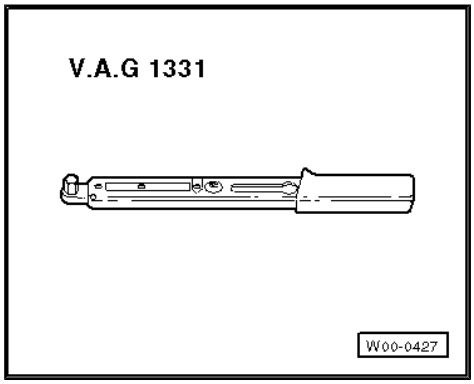

Note

- *The air conditioner compressor bracket and related components can be removed and installed without the refrigerant circuit being opened.*
- *To remove poly V-belt ⇒ Rep. Gr. 13 .*

Protected by copyright. Copying for private or commercial purposes, in part or in whole, is not permitted unless authorised by Volkswagen AG. Volkswagen AG does not guarantee or accept any liability with respect to the correctness of information in this document. Copyright by Volkswagen AG.

satelettronica

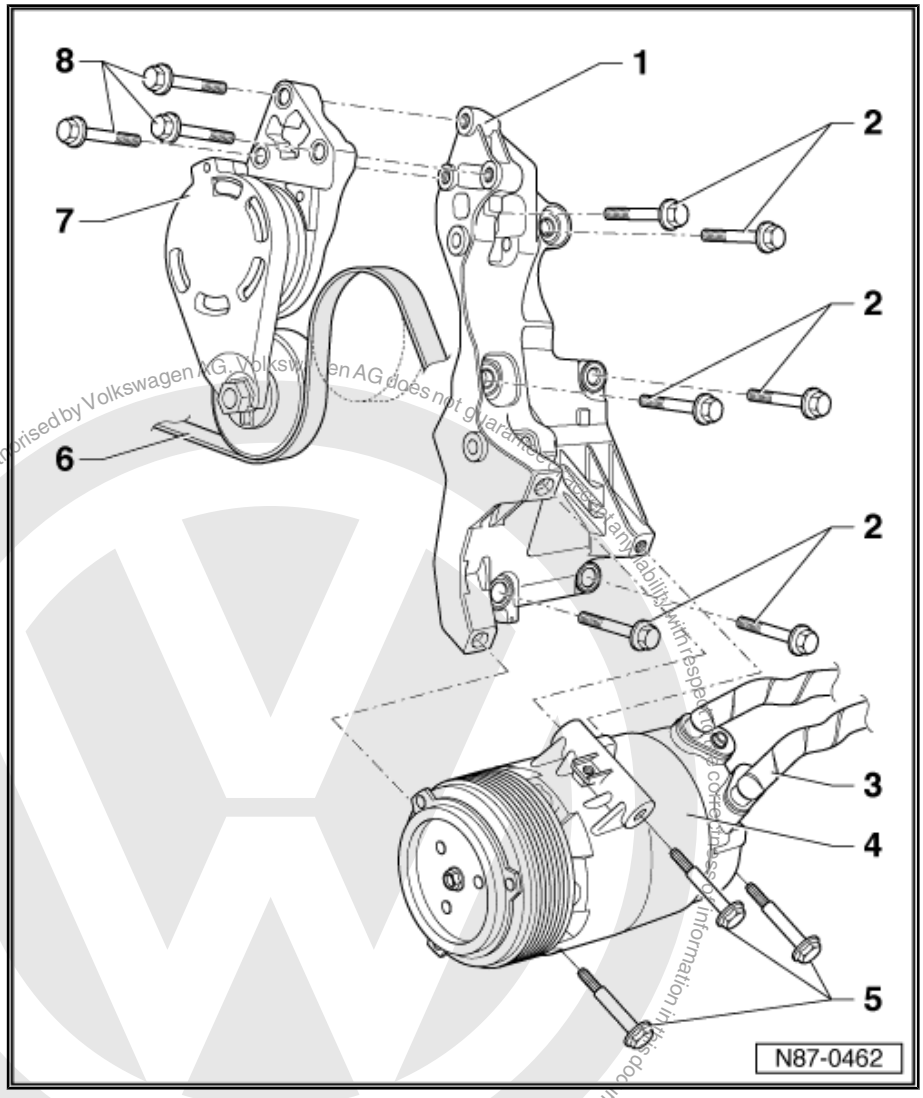

1 - Bracket for air conditioner compressor

♦ Part No. 045 903 143 E

Removing

– Move lock carrier to service position ⇒ Rep. Gr. 50 .

– Remove alternator ⇒ Rep. Gr. 27 .

– Remove air conditioner compressor from bracket and secure to body with suitable material (e.g. welding wire) ⇒ page 102 .

– Unbolt bracket from cylinder block.

Installing

When installing, always note:

- Renew securing bolts.

2 - Hexagonal combi bolt M10×45

❑ 45 Nm.
❑ Qty. 6

3 - Refrigerant hoses

4 - Air conditioner compressor

Removing:

❑ Remove hexagon bolts ⇒ Item 5 (page 101).
❑ Remove air conditioner compressor from bracket and secure to body with suitable material (e.g. welding wire) ⇒ page 102 .

5 - Hexagon bolt M8x100

❑ 25 Nm.
❑ Qty. 3

6 - Poly V-belt

❑ Removing and installing ⇒ Rep. Gr. 13 .
❑ Poly V-belt routing ⇒ page 102 .

7 - Tensioner

8 - Hexagon bolt M8×50

❑ 25 Nm.
❑ Qty. 3

Protected by copyright. Copying for private or commercial purposes, in part or in whole, is not permitted unless authorised by Volkswagen AG. Volkswagen AG does not guarantee or accept any liability with respect to the correctness of information in this document. Copyright by Volkswagen AG.
satelettronica

5.3.1 Securing air conditioner compressor to body

If compressor is removed without opening refrigerant circuit, it should be secured to body using suitable material, for example, welding wire.

When doing this, ensure refrigerant hoses on air conditioner compressor are not stressed.

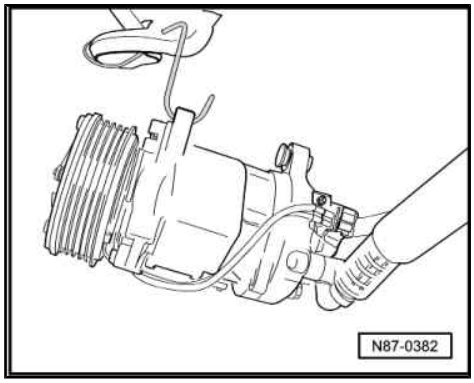

5.3.2 Poly V-belt routing

Note

When installing poly V-belt, ensure that it is correctly seated on poly V-belt pulley.

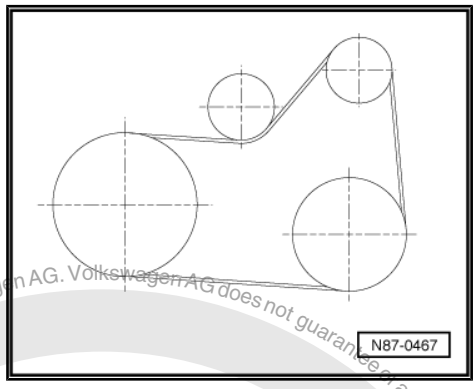

5.4 Removing and installing air conditioner compressor: engine codes AEF, AGD, AHG, AKU und ASX

Special tools and workshop equipment required

- Torque wrench -V.A.G 1331-

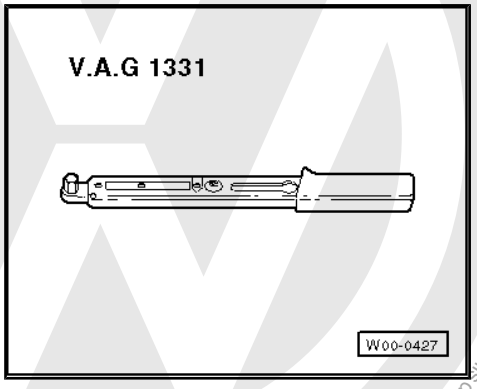

Protected by copyright. Copying for private or commercial purposes, in part or in whole, is not permitted unless authorised by Volkswagen AG. Volkswagen AG does not guarantee or accept any liability with respect to the correctness of information in this document. Copyright by Volkswagen AG.
satelettronica

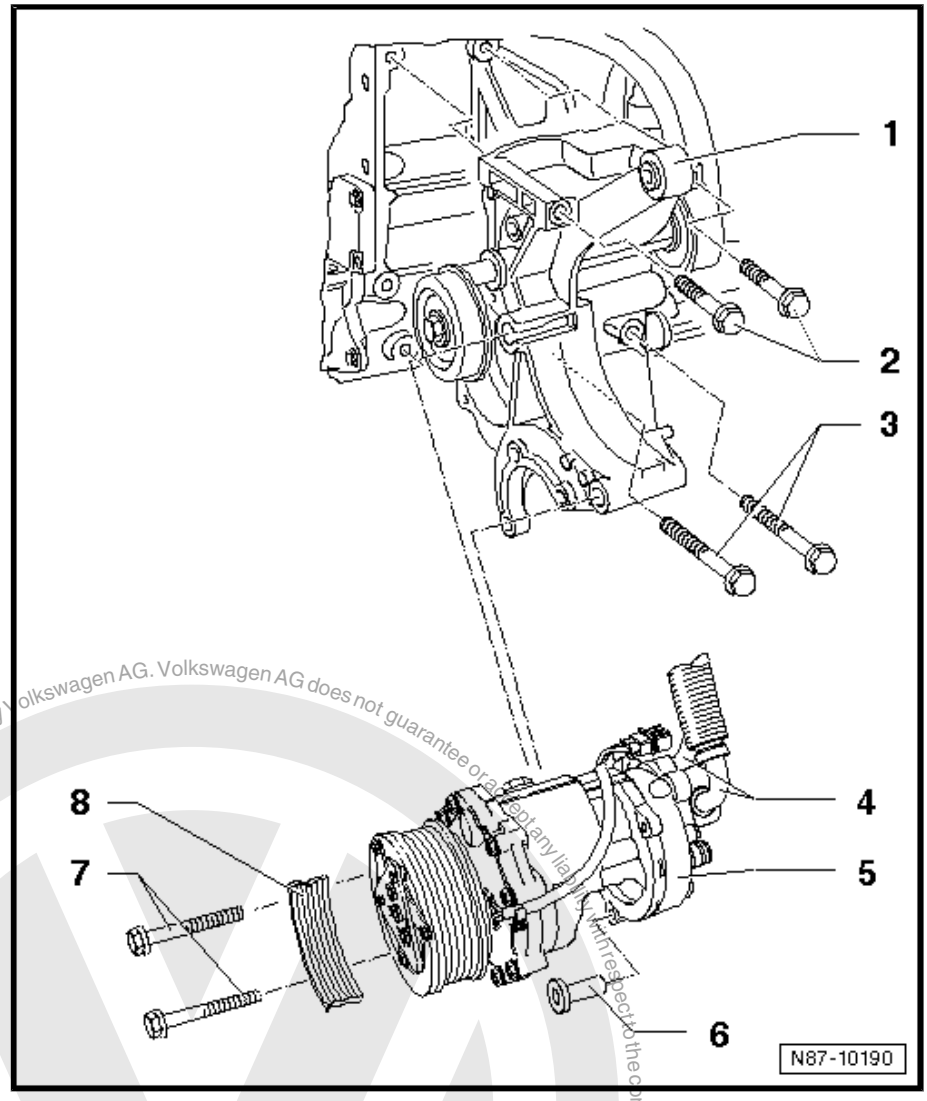

1 - Bracket for air conditioner compressor

Removing

– Move lock carrier to service position ⇒ Rep. Gr. 50 .

– Remove alternator ⇒ Rep. Gr. 27 .

– Remove air conditioner compressor from bracket and secure to body with suitable material (e.g. welding wire) ⇒ page 104 .

– Unbolt bracket from cylinder block.

Installing

When installing, always note:

- Renew securing bolts.
- Note tightening sequence ⇒ page 104 .

2 - Hexagon bolt M8×40

❑ 25 Nm.
❑ Qty. 2

3 - Hexagon bolt M8×60

❑ 25 Nm.
❑ Qty. 2

4 - Refrigerant hoses

5 - Air conditioner compressor

Removing:

❑ Remove hexagon bolts ⇒ Item 7 (page 103) .
❑ Remove air conditioner compressor from bracket and secure to body with suitable material (e.g. welding wire) ⇒ page 104 .

6 - Bush

❑ Always observe during installation: lightly coat sleeve with polycarbamide grease -G 052 142 A2- before installation and then press in.

7 - Hexagon bolt M10×112

❑ 45 Nm.
❑ Qty. 2

8 - Poly V-belt

❑ Removing and installing ⇒ Rep. Gr. 13 .
❑ Poly V-belt routing ⇒ page 104 .

Protected by copyright. Copyright by Volkswagen AG.
Volkswagen AG does not guarantee or accept any liability with respect to the correctness of information in this document. Copyright by Volkswagen AG.
satelettronica

5.4.1 Tightening sequence, compact bracket to cylinder block

– Set compact bracket in locating hole -1-.

– Tighten bolts -2-, -3-, -4-, -5- and -6- one after the other to 25 Nm.

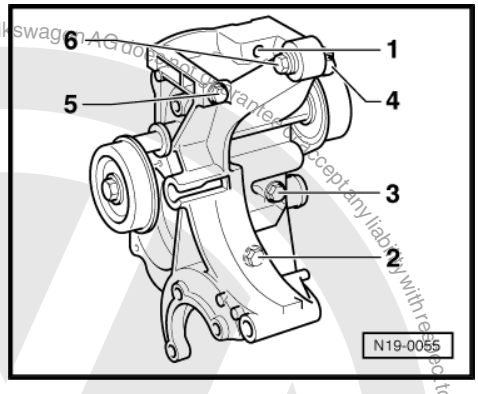

5.4.2 Securing air conditioner compressor to body

If compressor is removed without opening refrigerant circuit, it should be secured to body using suitable material, for example, welding wire.

When doing this, ensure refrigerant hoses on air conditioner compressor are not stressed.

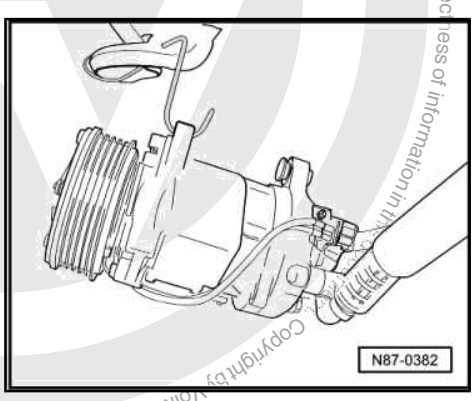

5.4.3 Poly V-belt routing

1 - Crankshaft vibration damper

2 - Poly V-belt

3 - Tensioner

4 - Alternator -C-

5 - Power steering vane pump

6 - Coolant pump

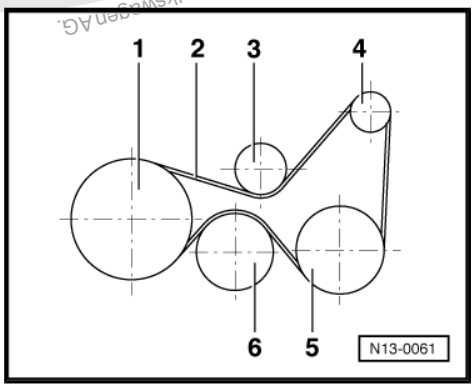

5.5 Repairing Sanden SD6 V12 air conditioning system magnetic coupling - N25-

Protected by copyright. Copying for private or commercial purposes, in part or in whole, is not permitted unless authorised by Volkswagen AG. Volkswagen AG does not guarantee or accept any liability with respect to the correctness of information in this
Copyright by Volkswagen AG.
satelettronica

Special tools and workshop equipment required

- Torque wrench -V.A.G 1331-
- Drift -2051-
- Pin wrench -3212-

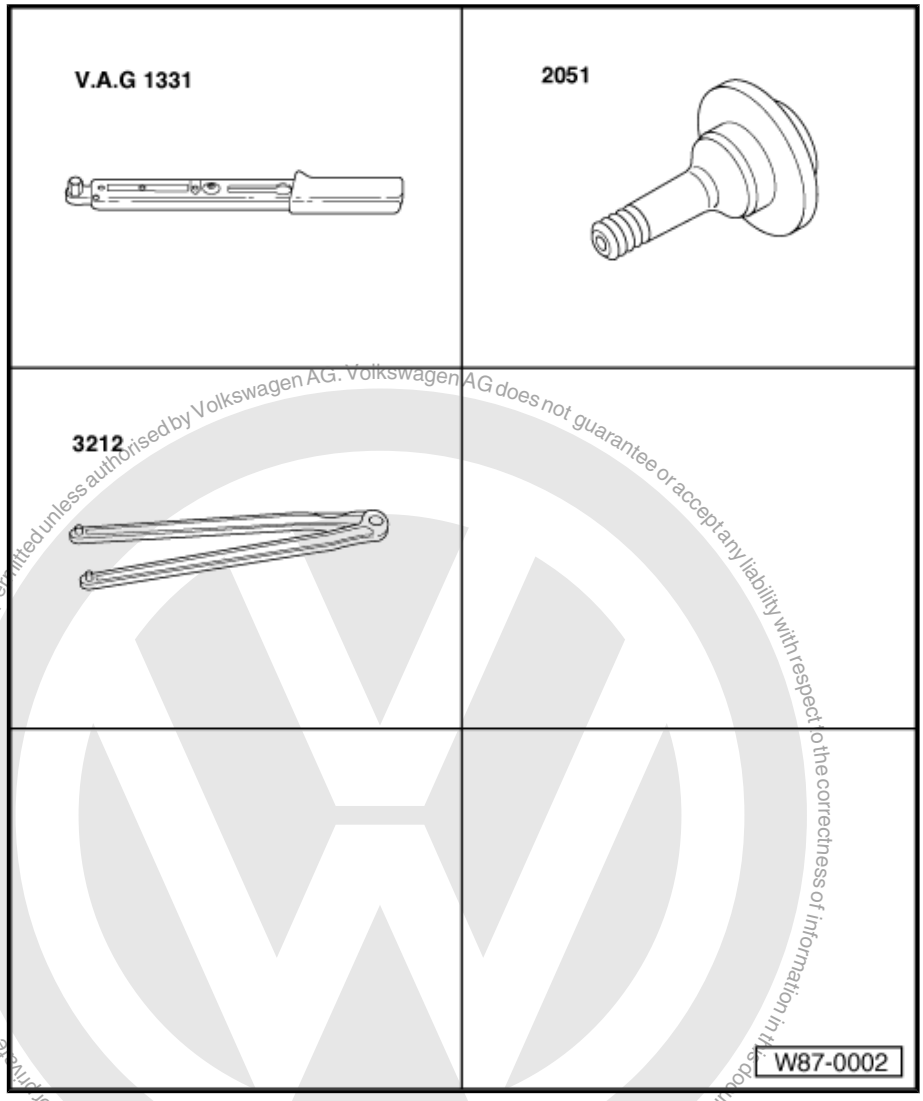

Copyright by Volkswagen AG. Volkswagen AG does not guarantee or accept any liability with respect to the correctness of information in this document. Copyright by Volkswagen AG. Copying for private or commercial purposes, in part or in whole, is not permitted unless authorised by Volkswagen AG.

Not illustrated:

- Two-arm puller, e.g. KUKKO 20-10 with 100 mm hooks or three-arm puller, e.g. KUKKO 45-2 with 44-45 hooks
- Open jaw flexible spanner
- Circlip pliers

Note

- *The coupling can also be repaired without extracting the refrigerant. In this case, unbolt air conditioner compressor from bracket and secure to body* ⇒ page 102 *.*
- *If the air conditioner compressor is to be removed, the refrigerant must be extracted beforehand, e.g. with the air conditioning service station -VAS 6007A- .*
- *To prevent the ingress of moisture, all components of the refrigerant circuit which have been opened must be sealed with suitable plugs.*

Removing

– Move lock carrier to service position ⇒ Rep. Gr. 50 .

– Unbolt air conditioner compressor from bracket ⇒ page 95 .

satelettronica

If air conditioning compressor is to be removed, perform the following work:

– Extract refrigerant, e.g. with air conditioning service station - VAS 6007A- .

> ⚠ **WARNING**
>
> *Danger of freezing injuries.*
>
> *If refrigerant circuit has not been evacuated, refrigerant may escape.*
>
> *Extract refrigerant before opening refrigerant circuit.*

– Separate refrigerant hoses from air conditioner compressor.

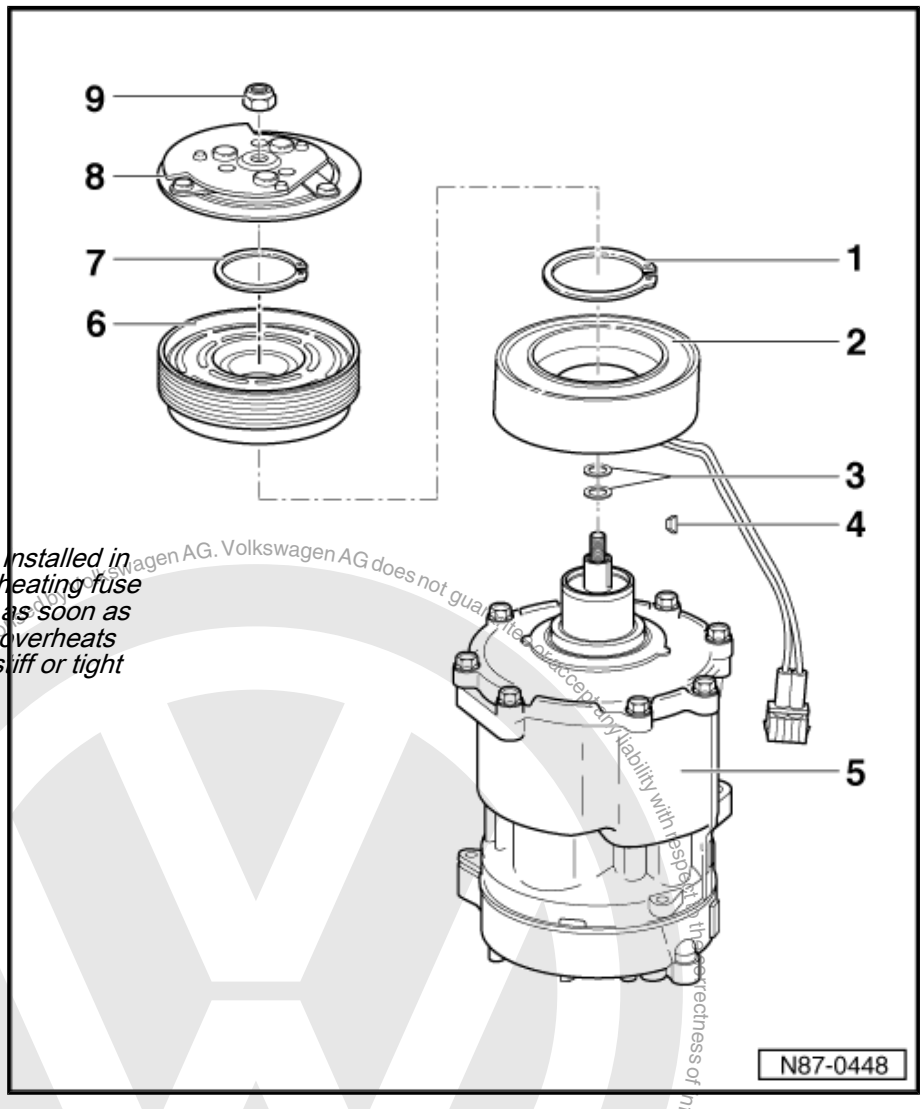

1 - Circlip

Renew.

- ❑ Install correctly: flat side faces air conditioner compressor.
- ❑ Ensure that it is seated correctly in groove.

2 - Air conditioning system magnetic coupling -N25-

- ❑ Remove ⇒ page 107 .
- ❑ Locking with dowel pin.
- ❑ Secured with circlip ⇒ Item 1 (page 106) .

> **Note**
>
> *An overheating fuse is installed in the solenoid. The overheating fuse interrupts the solenoid as soon as the magnetic coupling overheats (for example due to a stiff or tight compressor).*

3 - Spacers

- ❑ To adjust clearance between coupling and V-poly V-belt pulley.
- ❑ Checking clearance ⇒ page 110 .

4 - Dowel pin

5 - Air conditioner compressor

- ❑ Secure removed air conditioner compressor in a vice ⇒ page 107 .

6 - Poly V-belt pulley

- ❑ Pulling off ⇒ page 108 .
- ❑ Fitting ⇒ page 109 .

7 - Circlip

Renew.

- ❑ Install correctly: flat side faces air conditioner compressor.

satelettronica

- ❑ Ensure that it is seated correctly in groove.

8 - Coupling disc

- ❑ Pulling off ⇒ page 108 .
- ❑ Checking clearance ⇒ page 110 .

9 - Hexagon nut

- ❑ 20 Nm.
- ❑ Self-locking.
- ❑ Always renew.
- ❑ Removing ⇒ page 107 .

5.6 Removing and installing Sanden SD6 V12 air conditioning system magnetic coupling -N25-

5.6.1 Secure air conditioner compressor in a vice.

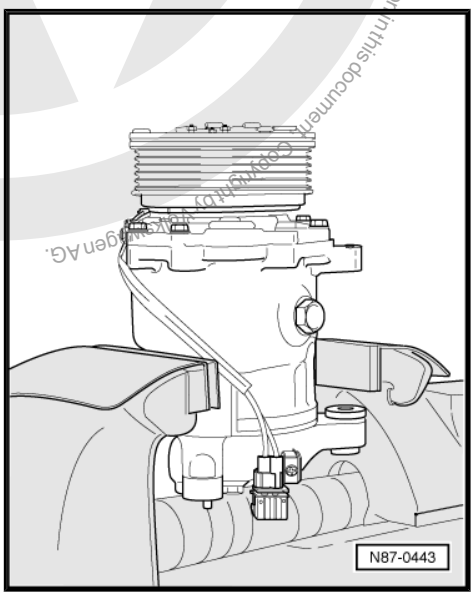

Note

- *Use protective jaw covers when clamping the air conditioner compressor in the vice.*
- *Make sure cable to magnetic coupling is not pinched between vice and air conditioner compressor housing.*

5.6.2 Unscrewing hexagon nut

Special tools and workshop equipment required

- Pin wrench -3212-

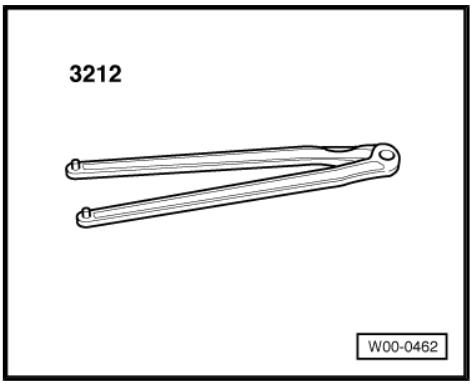

Protected by copyright. Copying for private or commercial purposes, in part or in whole, is not permitted unless authorised by Volkswagen AG. Volkswagen AG does not guarantee or accept any liability with respect to the correctness of information in this document. Copyright by Volkswagen AG.
satelettronica

– Using a pin wrench -3212- and an open jaw flexible spanner, unscrew hexagon nuts.

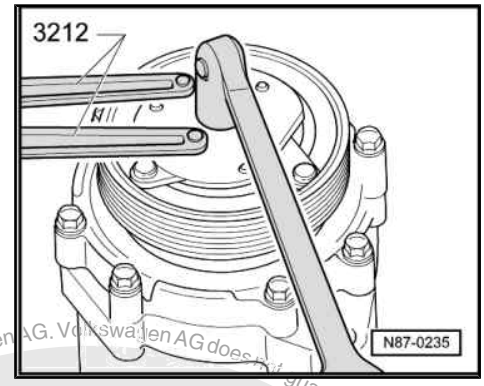

5.6.3 Pulling off coupling disc

– Insert a screwdriver into gap between coupling disc and poly V-belt pulley.
– Turn screwdriver slightly -arrow-.
– Repeat procedure at two other points along circumference -arrows-.
– Remove coupling disc.
– Remove spacers ⇒ Item 3 (page 106) .

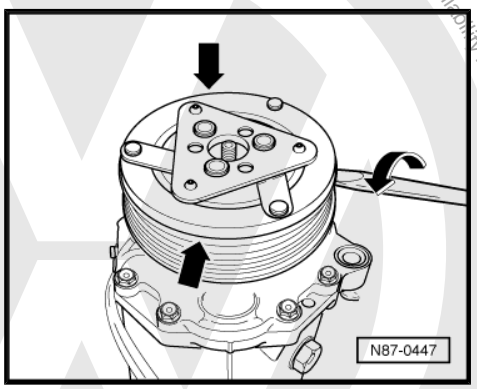

5.6.4 Pulling off poly V-belt pulley for air conditioning system magnetic coupling - N25-

– Remove retaining ring for poly V-belt pulley.

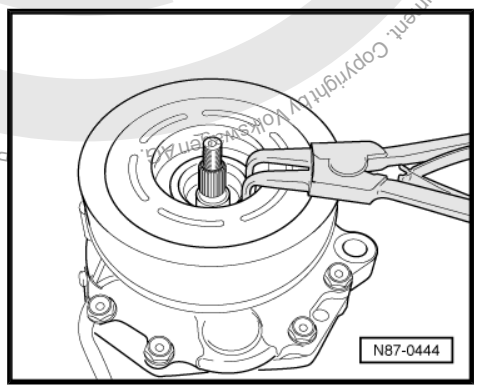

Protected by copyright. Copying for private or commercial purposes, in part or in whole, is not permitted unless authorised by Volkswagen AG. Volkswagen AG does not guarantee or accept any liability with respect to the correctness of information in this document. Copyright by Volkswagen AG.
satelettronica

– Pull off poly V-belt pulley with a commercially available two-arm puller, e.g. Kukko 45-2 with 44-45 hooks.

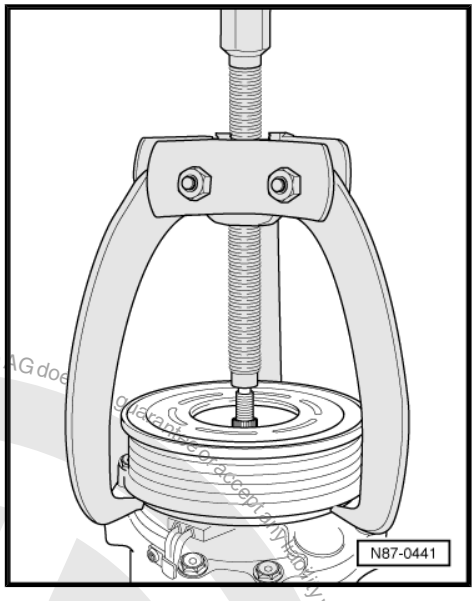

– Place hooks -arrow- as shown in illustration.

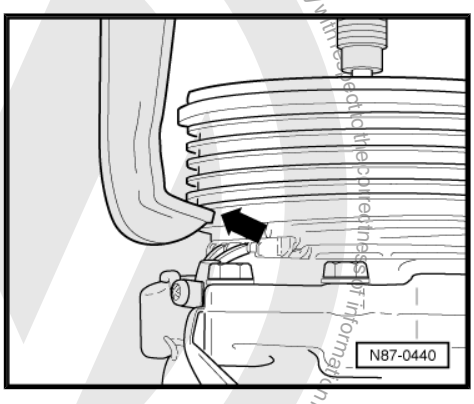

Note

If hook is placed on lower edge of poly V-belt pulley, there is a danger of damaging air conditioning system magnetic coupling -N25- .

5.6.5 Removing solenoid

– Remove retaining ring for solenoid.

– Remove solenoid from air conditioner compressor.

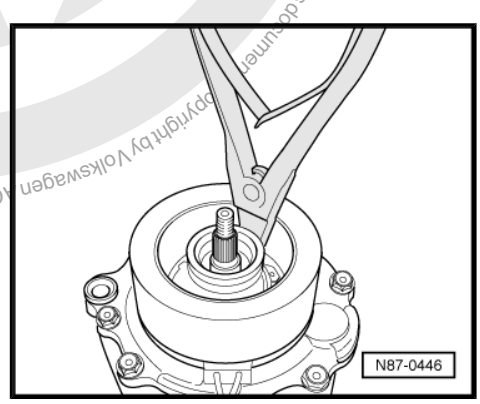

5.6.6 Installing poly V-belt pulley for air conditioning system magnetic coupling -N25-

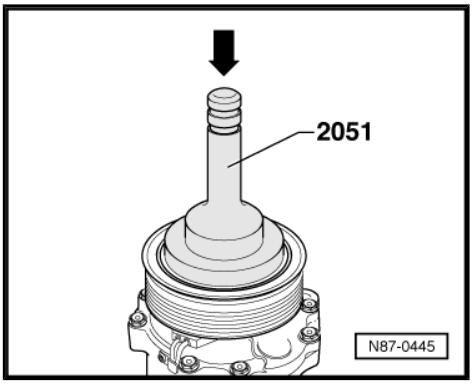

Note

Set poly V-belt pulley in place flat, or it could be deformed when driven in.

– Drive in poly V-belt pulley using drift -2051- and a rubber hammer -direction of arrow-.

Protected by copyright. Copying for private or commercial purposes, in part or in whole, is not permitted unless authorised by Volkswagen AG. Volkswagen AG does not guarantee or accept any liability with respect to the correctness of information in this document. Copyright by Volkswagen AG.
satelettronica

5.6.7 Checking and adjusting clearance

– Check clearance with a depth gauge by repeatedly switching magnetic coupling on and off (apply a voltage of 12 V).

♦ Nominal value: 0.4 to 0.8 mm

– If necessary, use spacers to adjust clearance. Pull off the coupling disc to do this.

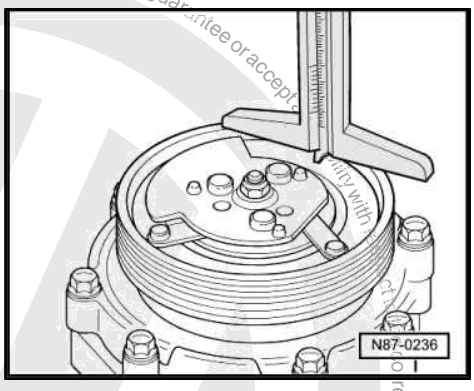

Note

♦ *The clearance must lie within permitted tolerances over the complete circumference.*

♦ *The clearance can also be measured when the air conditioner compressor is installed.*

♦ *If the clearance is outside of the specifications, remove the coupling disc and adjust the clearance by removing or adding spacers.*

5.7 Repairing Sanden SD7 B10 air conditioning system magnetic coupling -N25- with compressor removed

Special tools and workshop equipment required

♦ Retainer and puller -V.A.G 1616+1616/1-

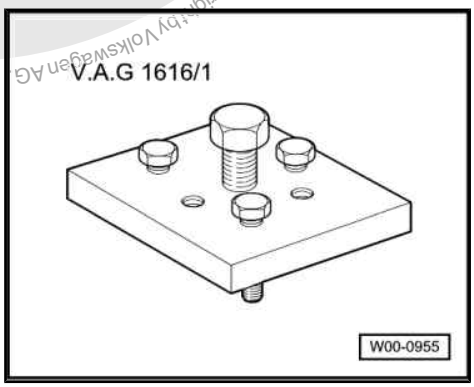

♦ Pin wrench -3212-

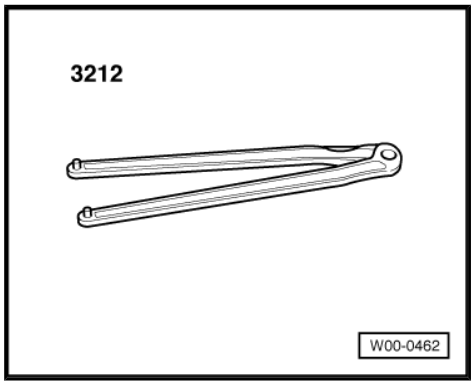

Protected by copyright. Copyright by Volkswagen AG. Volkswagen AG does not guarantee or accept any liability with respect to the correctness of information in this document. Copyright by Volkswagen AG. Reproduction in whole or in part is not permitted unless authorised by Volkswagen AG. Volkswagen AG does not guarantee or accept any liability with respect to the correctness of information in this document. Copyright by Volkswagen AG.
satelettronica

Protected by copyright. Copying for private or commercial purposes, in part or in whole, is not permitted unless authorised by Volkswagen AG. Volkswagen AG does not guarantee or accept any liability with respect to the correctness of information in this document. Copyright by Volkswagen AG.

- Universal dial gauge bracket -VW 387-

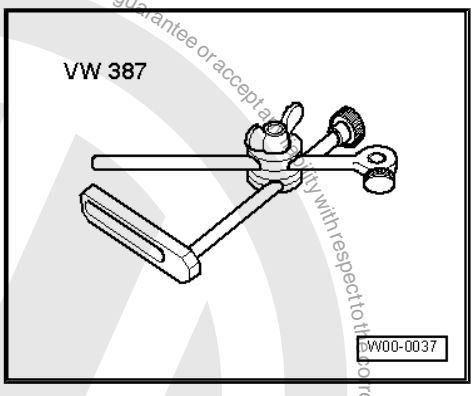

- Air conditioning service station -VAS 6007A-

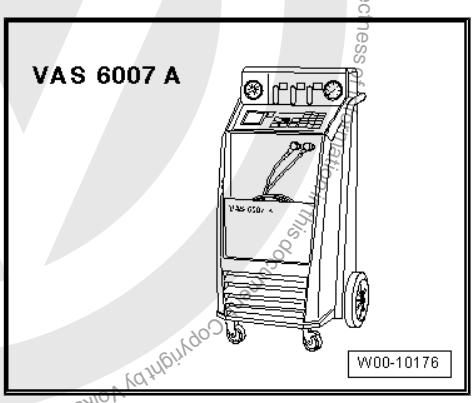

Not illustrated:

- Commercially available two-arm puller e.g. Kukko 20-10 mm with 100 mm long hooks.
- Dial gauge, commercially available

Removing

– Extract refrigerant, e.g. with air conditioning service station - VAS 6007A- .

Note

Releasing refrigerant into the environment is a punishable offence.

WARNING

Danger of freezing injuries.

If refrigerant circuit has not been evacuated, refrigerant may escape.

Extract refrigerant before opening refrigerant circuit.

– Unbolt air conditioner compressor from bracket ⇒ page 95 .

satelettronica

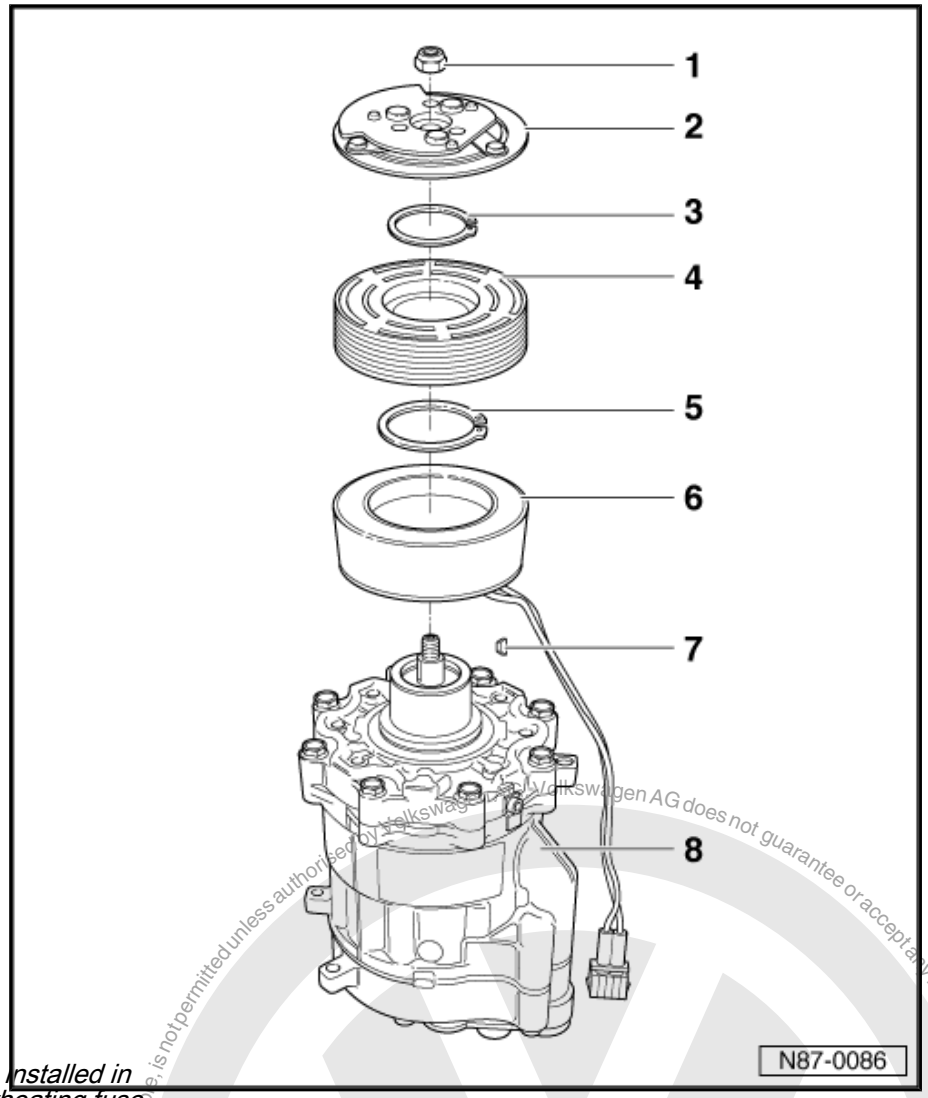

1 - Hexagon nut

- ❑ Self-locking.
- ❑ Renew.
- ❑ 20 Nm.
- ❑ Removing ⇒ page 113 .

2 - Coupling disc

- ❑ Pulling off ⇒ page 113 .
- ❑ Checking clearance ⇒ page 114 .

3 - Circlip

- ❑ Renew.
- ❑ Install correctly: flat side faces air conditioner compressor.
- ❑ Ensure that it is seated correctly in groove.

4 - Poly V-belt pulley

- ❑ Pulling off ⇒ page 113 .

5 - Circlip

- ❑ Renew.
- ❑ Install correctly: flat side faces air conditioner compressor.
- ❑ Ensure that it is seated correctly in groove.

6 - Solenoid

- ❑ Locking with dowel pin.

Note

An overheating fuse is installed in the solenoid. The overheating fuse interrupts the solenoid as soon as the magnetic coupling overheats (for example due to a stiff or tight compressor).

7 - Dowel pin

8 - Air conditioner compressor

satelettronica
Protected by copyright. Copying for private or commercial purposes, in part or in whole, is not permitted unless authorised by Volkswagen AG. Volkswagen AG does not guarantee or accept any liability with respect to the correctness of information in this document. Copyright by Volkswagen AG.

Protected by copyright. Copying for private or commercial purposes, in part or in whole, is not permitted unless authorised by Volkswagen AG. Volkswagen AG does not guarantee or accept any liability with respect to the correctness of information in this document. Copyright by Volkswagen AG.

5.8 Removing and installing Sanden SD7 B10 air conditioning system magnetic coupling -N25-

5.8.1 Unscrewing hexagon nut

– Using a pin wrench -3212- and an open jaw flexible spanner, unscrew hexagon nuts.

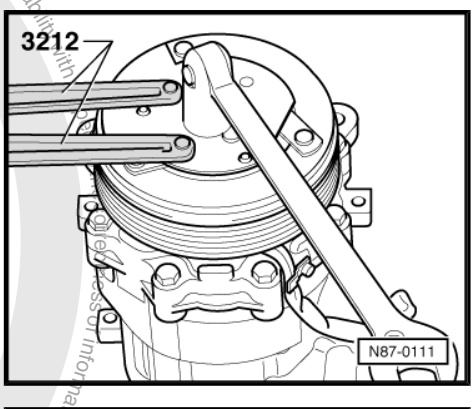

5.8.2 Pulling off coupling disc

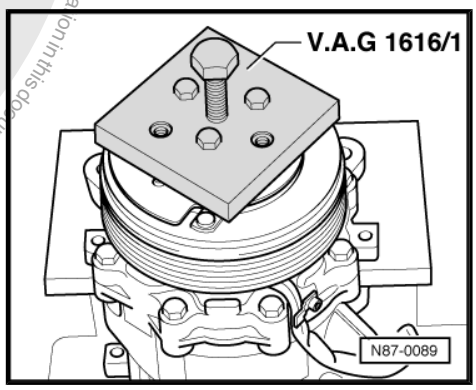

Note

The three hexagon bolts of retainer and puller -V.A.G 1616 +1616/1- have 1/4" threads.

5.8.3 Pulling off poly V-belt pulley for air conditioning system magnetic coupling -N25-

– Remove retaining ring for poly V-belt pulley.

– Place hooks as shown in illustration.

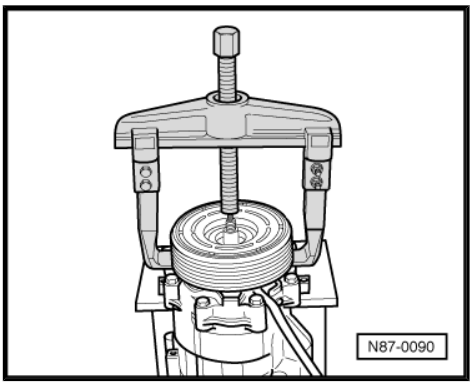

Note

If hook is placed on lower edge of poly V-belt pulley, there is a danger of damaging air conditioning system magnetic coupling -N25- .

– Pull off V-belt pulley with a commercially available two-arm puller, e.g. Kukko 20-10 with 100 mm long hooks.

satelettronica

5.8.4 Checking clearance

– Check clearance with a depth gauge and universal dial gauge bracket -VW 387- by repeatedly switching magnetic coupling on and off (apply a voltage of 12 V).

♦ Nominal value: 0.4 to 0.8 mm

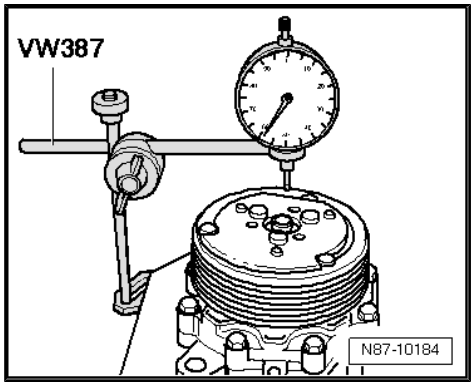

Note

The clearance must lie within permitted tolerances over the complete circumference.

Protected by copyright. Copying for private or commercial purposes, in part or in whole, is not permitted unless authorised by Volkswagen AG. Volkswagen AG does not guarantee or accept any liability with respect to the correctness of information in this document. Copyright by Volkswagen AG.

satelettronica

6 Repair work on refrigerant circuit which may be performed only in appropriate workshops by specially trained mechanics for vehicles ▸ 09.99

6.1 Tools

6.1.1 Required special tools, facilities, testing and measuring instruments and auxiliary items

Notes on repair work to vehicles with air conditioning and on handling refrigerant can be found in ELSA under repair group ⇒ Rep. Gr. 00 Technical information “Air conditioning system - with refrigerant R134a VW”.

Notes on tools for repair work to vehicles with air conditioning can be found in ELSA under repair group ⇒ Rep. Gr. 00 Technical information “Air conditioning system - with refrigerant R134a VW”.

The version in ELSA under the Internet button is no longer valid.

6.2 Repairing components in refrigerant circuit

Note

- *The refrigerant must be extracted beforehand, e.g. with the air conditioning service station -VAS 6007A- .*
- *The previously used service stations can still be used ⇒ Volkswagen Workshop Equipment catalogue.*
- *Safety measures when working on an evacuated refrigerant circuit ⇒ page 51 .*
- *Only the components marked with an * can be renewed without opening and evacuating the refrigerant circuit.*
- *To prevent the ingress of moisture, all components of the refrigerant circuit which have been opened must be sealed with suitable plugs.*
- *The colour coding of O-rings for R134a refrigerant circuits has been discontinued. Coloured and black O-rings are used.*
- *Moisten threaded connections of refrigerant circuit with polyethylene glycol (PEG) VW part number 294440 before installation.*
- *Under certain conditions, it is no longer necessary to renew the receiver each time the refrigerant circuit is opened ⇒ Rep. Gr. 00 Technical information “Air conditioning systems - with refrigerant R134a VW” Renewing parts.*

Protected by copyright. Copying for private or commercial purposes, in part or in whole, is not permitted unless authorised by Volkswagen AG. Volkswagen AG does not guarantee or accept any liability with respect to the correctness of information in this document. Copyright by Volkswagen AG.
satelettronica

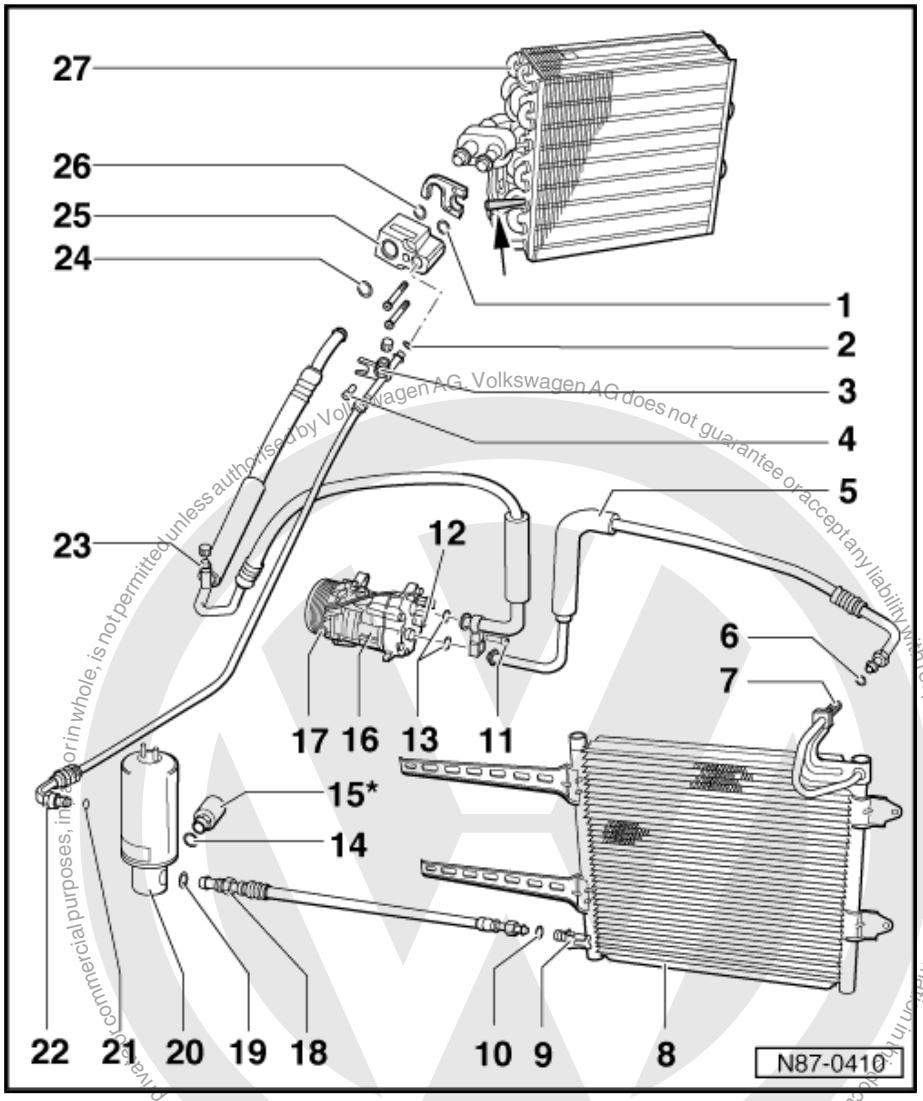

1 - O-ring

- ❑ 10.8 mm; 1.8 mm.

2 - O-ring

- ❑ 7.6 mm; 1.8 mm.

3 - Extraction and charging valve

- ❑ High pressure side.
- ❑ Releasing refrigerant into the environment is a punishable offence.
- ❑ Removing and installing ⇒ page 118 .
- ❑ Capacities ⇒ page 145 .

4 - Socket head screw

- ❑ M6×20
- ❑ With washer 12 mm; 1.6 mm
- ❑ 7 Nm.

5 - Foam hose

6 - O-ring

- ❑ 10.8 mm; 1.8 mm.

7 - 3/4" thread -17 UNF

- ❑ 35 Nm.

8 - Condenser

- ❑ Removing ⇒ page 142 .

9 - 5/8" thread -18 UNF

- ❑ 15 Nm.

10 - O-ring

- ❑ 7.6 mm; 1.8 mm.

11 - Combi bolt

- ❑ M10×32
- ❑ 30 Nm.

12 - High-pressure safety valve

- ❑ Checking ⇒ page 59 .

13 - O-rings

- ❑ Qty. 2
- ❑ 20.5 mm; 1.8 mm.

14 - O-ring

- ❑ 10.8 mm; 1.8 mm.

15 - Air conditioning system pressure switch -F129- *

Removing and installing:

- ❑ Torque setting: 8 Nm
- ❑ Renew O-ring (note part number).
- ❑ The high pressure sender -F129- can be removed without extracting the refrigerant from the refrigerant circuit.
- ❑ Checking air conditioning system pressure switch -F129- ⇒ page 60 .

Function:

Protected by copyright. Copying for private or commercial purposes, in whole or in part, is not permitted unless authorised by Volkswagen AG. Volkswagen AG does not guarantee or accept any liability with respect to the correctness of information in this document. Copyright by Volkswagen AG.
satelettronica

- ❑ Switches radiator fan -V7- to next higher speed when pressure increases in refrigerant circuit.
- ❑ Switches off the air conditioner when the pressure is high (for example, insufficient engine cooling).
- ❑ Switches off the air conditioner when the pressure is too low (for example, loss of refrigerant).

16 - Air conditioner compressor

- ❑ With air conditioning system magnetic coupling -N25- .

17 - Air conditioning system magnetic coupling -N25- for air conditioner compressor

- ❑ Manufacturer: Sanden

Repairs on the magnetic coupling with the air conditioner compressor installed should only be performed only as an exception.

- ❑ Repairing magnetic coupling with compressor removed ⇒ page 104 .

18 - 3/4" thread -16 UNF

- ❑ 35 Nm.

19 - O-ring

- ❑ 10.8 mm; 1.8 mm.

20 - Receiver with dryer bag

- ❑ Functions ⇒ page 119 .

21 - O-ring

- ❑ 7.8 mm; 1.8 mm.

22 - 5/8" thread -18 UNF

- ❑ 15 Nm.

23 - Extraction and charging valve

- ❑ Low pressure side.
- ❑ Releasing refrigerant into the environment is a punishable offence.
- ❑ Removing and installing ⇒ page 118 .
- ❑ Capacities ⇒ page 145 .

24 - O-ring

- ❑ 16.7 mm; 1.8 mm.

25 - Expansion valve

- ❑ In engine compartment, right.
- ❑ Aperture must be sealed against splashed water.
- ❑ Removing ⇒ page 119 .

Functions:

- ♦ The expansion valve atomises the in streaming refrigerant and regulates the through flow so that the vapour, depending on heat transport, becomes a gas only upon reaching the outlet of the evaporator.
- ♦ The expansion valves for R134a refrigerant circuits are marked with a green sticker.

26 - O-ring

- ❑ 14 mm; 1.8 mm.

27 - Evaporator

- ❑ In passenger compartment.
- ❑ Removing ⇒ page 122 .
- ❑ With funnel -arrow- to guide of sensor tube from evaporator temperature switch -E33- .

Protected by copyright. Copying for private or commercial purposes, in part or in whole, is not permitted unless authorised by Volkswagen AG. Volkswagen AG does not guarantee or accept any liability with respect to the correctness of information in this document. Copyright by Volkswagen AG.
satelettronica

6.3 Removing extraction and charging valve, low pressure side

WARNING

Danger of freezing injuries.

If refrigerant circuit has not been evacuated, refrigerant may escape.

Extract refrigerant before opening refrigerant circuit.

– Extract refrigerant from refrigerant circuit, e.g. with air conditioning service station -VAS 6007A- before replacing valve -3-.

For additional service stations ⇒ V.A.G Workshop Equipment Catalogue.

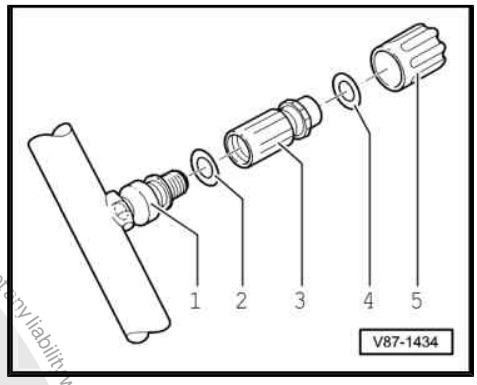

Note

- *Releasing refrigerant into the environment is a punishable offence.*
- *All components of the refrigerant circuit which have been opened must be sealed with suitable plugs to prevent moisture penetration.*

1 - Connection with external thread and groove for O-ring

2 - O-ring; 7.6 mm; 1.8 mm

3 - Extraction and charging valve

4 - O-ring

5 - Cap

6.4 Removing extraction and charging valve, high pressure side

WARNING

Danger of freezing injuries.

If refrigerant circuit has not been evacuated, refrigerant may escape.

Extract refrigerant before opening refrigerant circuit.

– Extract refrigerant from refrigerant circuit, e.g. with air conditioning service station -VAS 6007A- before replacing valve -3-.

For additional service stations ⇒ V.A.G Workshop Equipment Catalogue.

Copyright by Volkswagen AG. Volkswagen AG does not guarantee or accept any liability with respect to the correctness of information in this document. Copying for private or commercial purposes, in part or in whole, is not permitted unless authorised by Volkswagen AG. Protected by copyright.
satelettronica

Note

- *Releasing refrigerant into the environment is a punishable offence.*
- *All components of the refrigerant circuit which have been opened must be sealed with suitable plugs to prevent moisture penetration.*

1 - Connection with internal thread

2 - O-ring; 10.8 mm; 1.8 mm

3 - Extraction and filling valve with groove and internal thread for cap

4 - O-ring

5 - Cap

6.5 Tasks of receiver with dryer bag

The receiver collects the liquid droplets and directs them in a continuous stream to the expansion valve. Moisture which has entered the refrigerant circuit during assembly is collected by the dryer bag in the receiver.

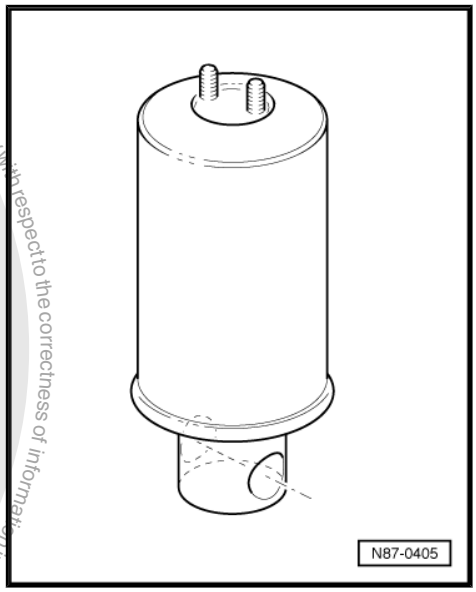

Note

Under certain conditions, it is no longer necessary to renew the receiver each time the refrigerant circuit is opened ⇒ Rep. Gr. 00 Technical information "Air conditioning systems - with refrigerant R134a VW" Renewing parts.

6.6 Removing expansion valve

Note

- *The refrigerant must be extracted beforehand, e.g. with the air conditioning service station -VAS 6007A- .*
- *The previously used service stations can still be used ⇒ Volkswagen Workshop Equipment catalogue.*
- *Safety measures when working on an evacuated refrigerant circuit* *⇒ page 51* *.*
- *Only the components marked with an * can be replaced without opening and evacuating.*
- *To prevent the ingress of moisture, all components of the refrigerant circuit which have been opened must be sealed with suitable plugs.*
- *The colour coding of O-rings for R134a refrigerant circuits has been discontinued. Coloured and black O-rings are used.*

Copyright by Volkswagen AG. Volkswagen AG does not guarantee or accept any liability with respect to the correctness of information in this document. Copyright by Volkswagen AG. Copying for private or commercial purposes, in part or in whole, is not permitted unless authorised by Volkswagen AG. Volkswagen AG does not guarantee or accept any liability with respect to the correctness of information in this document. Copyright by Volkswagen AG.
satelettronica

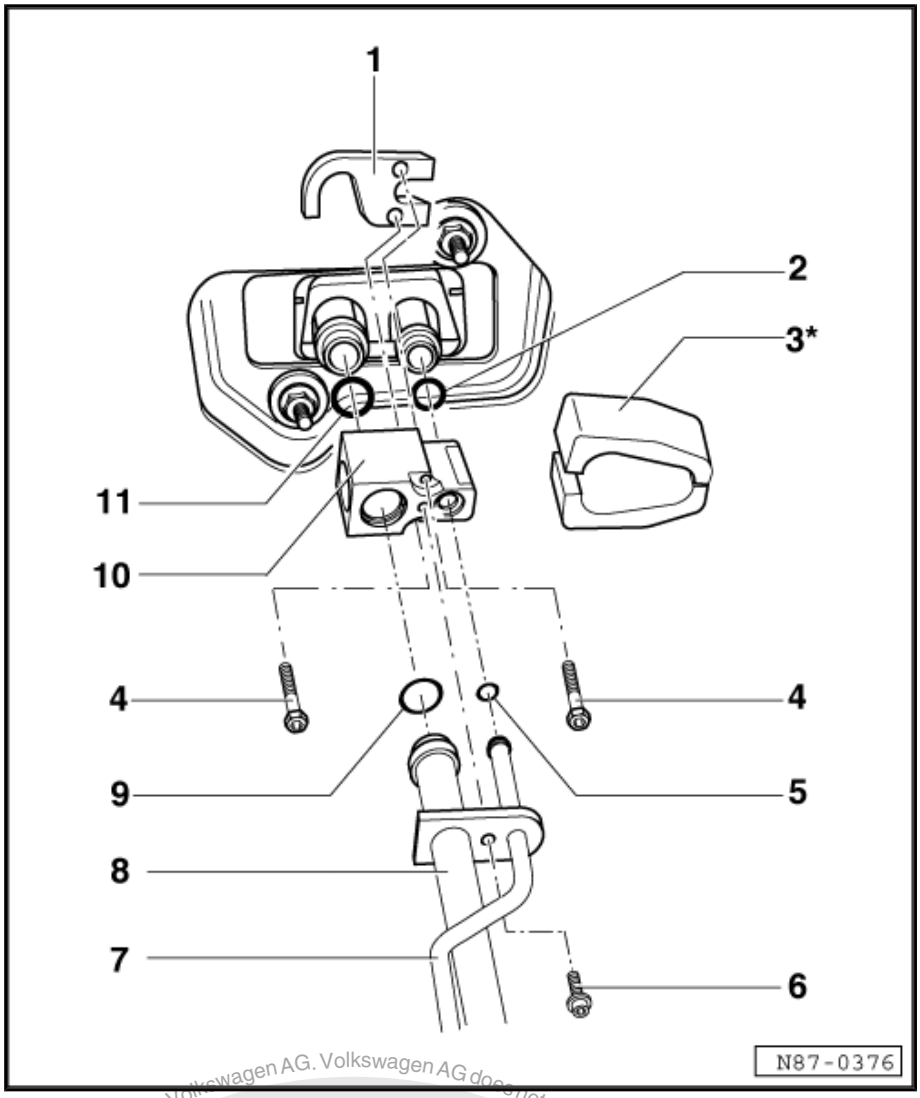

1 - Threaded plate

2 - O-ring

- ❑ 10.8 mm; 1.82 mm.

3 - Heat insulation*

4 - Bolts

- ❑ 8 Nm.
- ❑ Qty. 2

5 - O-ring

- ❑ 7.6 mm; 1.8 mm.

6 - Bolt

- ❑ 7 Nm.

7 - Refrigerant line

- ❑ From receiver with dryer bag to expansion valve.

8 - Refrigerant hose

- ❑ From expansion valve to air conditioner compressor.
- ❑ With damper.

9 - O-ring

- ❑ 16.7 mm; 1.8 mm.

10 - Expansion valve

- ❑ In engine compartment, right.
- ❑ Aperture must be sealed against splashed water.

Removing

– The refrigerant must be extracted beforehand, e.g. with the air conditioning service station -VAS 6007A- .

– Remove heat ⇒ Item 3 (page 120) insulation.

> ⚠ **WARNING**
>
> *Danger of freezing injuries.*
>
> *If refrigerant circuit has not been evacuated, refrigerant may escape.*
>
> *Extract refrigerant before opening refrigerant circuit.*

– Remove bolt ⇒ Item 6 (page 120) .

– Pull out refrigerant line ⇒ Item 7 (page 120) and refrigerant hose ⇒ Item 8 (page 120) .

– Renew O-rings ⇒ Item 5 (page 120) and ⇒ Item 9 (page 120) .

– Remove bolts ⇒ Item 4 (page 120) .

– Remove expansion valve ⇒ Item 10 (page 120) .

Protected by copyright. Copying for private or commercial purposes, in part or whole, is not permitted unless authorised by Volkswagen AG. Volkswagen AG does not guarantee or accept any liability with respect to the correctness of information in this document. Copyright by Volkswagen AG.
satelettronica

– Renew O-rings ⇒ Item 2 (page 120) and ⇒ Item 11 (page 121) .

11 - O-ring

❑ 14 mm; 1.82 mm.

6.7 Removing and installing condenser

6.7.1 Before beginning repair work, perform the following steps:

– Switch off all electrical consumers.

– Switch off ignition.

– Pull out ignition key.

Note

- *The refrigerant must be extracted beforehand, e.g. with the air conditioning service station -VAS 6007A- .*
- *The previously used service stations can still be used ⇒ Volkswagen Workshop Equipment catalogue.*
- *To prevent the ingress of moisture, all components of the refrigerant circuit which have been opened must be sealed with suitable plugs.*

Protected by copyright. Copyright for private or commercial purposes, in part or in whole, is not permitted unless authorised by Volkswagen AG. Volkswagen AG does not guarantee or accept any liability with respect to the correctness of information in this document. Copyright by Volkswagen AG.

satelettronica

1 - Sealing strip
- ❑ Qty. 2

2 - Condenser

Removing

– Extract refrigerant, e.g. with air conditioning service station -VAS 6007A- .

Note

Releasing refrigerant into the environment is a punishable offence.

WARNING

Danger of freezing injuries.

If refrigerant circuit has not been evacuated, refrigerant may escape.

Extract refrigerant before opening refrigerant circuit.

– Remove refrigerant lines on condenser and seal.

– Remove radiator grille ⇒ Rep. Gr. 66 .

– Remove bumper ⇒ Rep. Gr. 63 .

3 - Self-tapping screws
- ❑ Qty. 4
- ❑ 10 Nm.

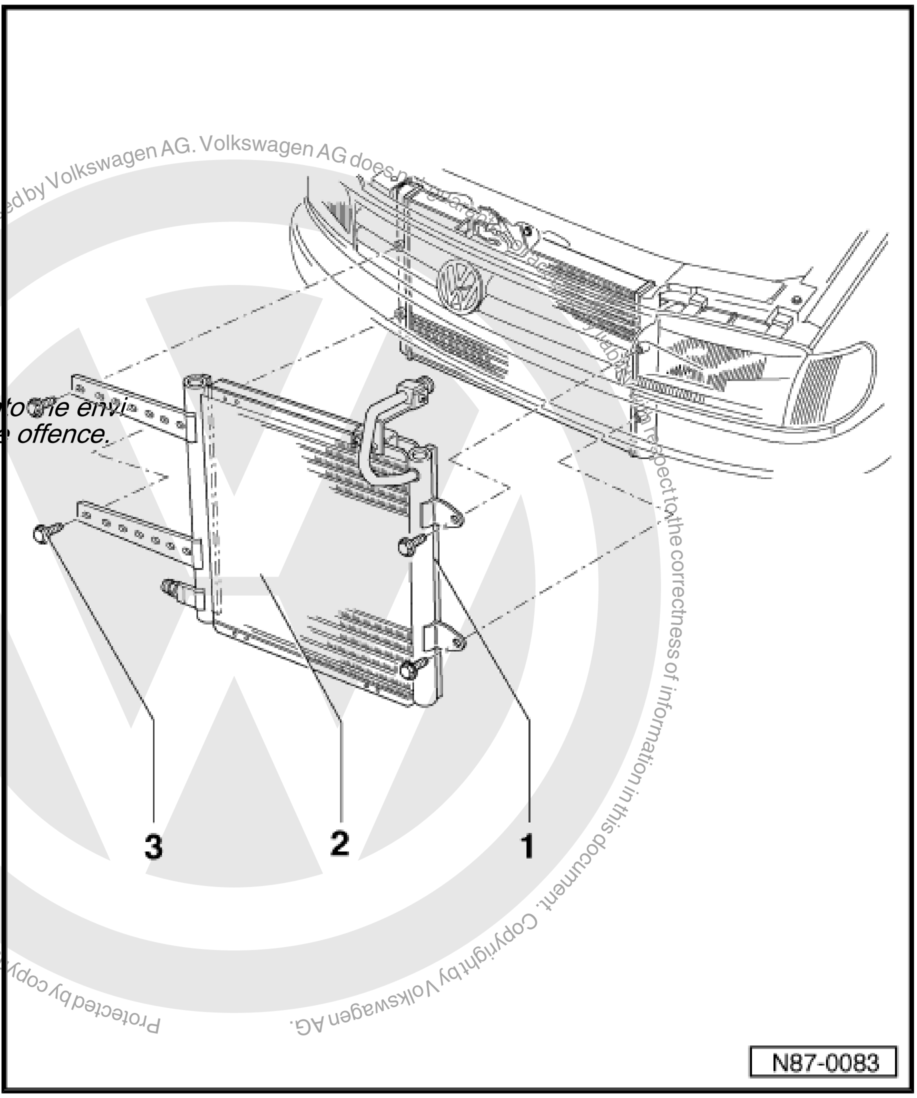

Protected by copyright. Copying for private or commercial purposes, in part or in whole, is not permitted unless authorised by Volkswagen AG. Volkswagen AG does not guarantee or accept any liability with respect to the correctness of information in this document. Copyright by Volkswagen AG.

satelettronica

6.8 Dismantling and assembling evaporator housing

6.8.1 Before beginning repair work, perform the following steps:

– Switch off all electrical consumers.

– Switch off ignition.

– Pull out ignition key.

Before dismantling, heater and air conditioner unit must be removed.

– Extract refrigerant, e.g. with air conditioning service station - VAS 6007A- .

Note

Releasing refrigerant into the environment is a punishable offence.

WARNING

Danger of scalding injuries.

The cooling system is pressurised. When the engine is warm, the coolant temperature may be above 100° C.

If necessary, release pressure before carrying out repairs.

– Drain the coolant ⇒ Rep. Gr. 19 .
– Remove dash panel ⇒ Rep. Gr. 70 .
– Remove heater and air conditioner unit.

Note

- *Safety measures when working on an evacuated refrigerant circuit* *⇒ page 51* .
- *The previously used service stations can still be used ⇒ Volkswagen Workshop Equipment catalogue.*
- *To prevent the ingress of moisture, all components of the refrigerant circuit which have been opened must be sealed with suitable plugs.*
- *Underlined components can be renewed only after evaporator with heater has been removed.*

Protected by copyright. Copying for private or commercial purposes, in part or in whole, is not permitted unless authorised by Volkswagen AG. Volkswagen AG does not guarantee or accept any liability with respect to the correctness of information in this document. Copyright by Volkswagen AG.
satelettronica

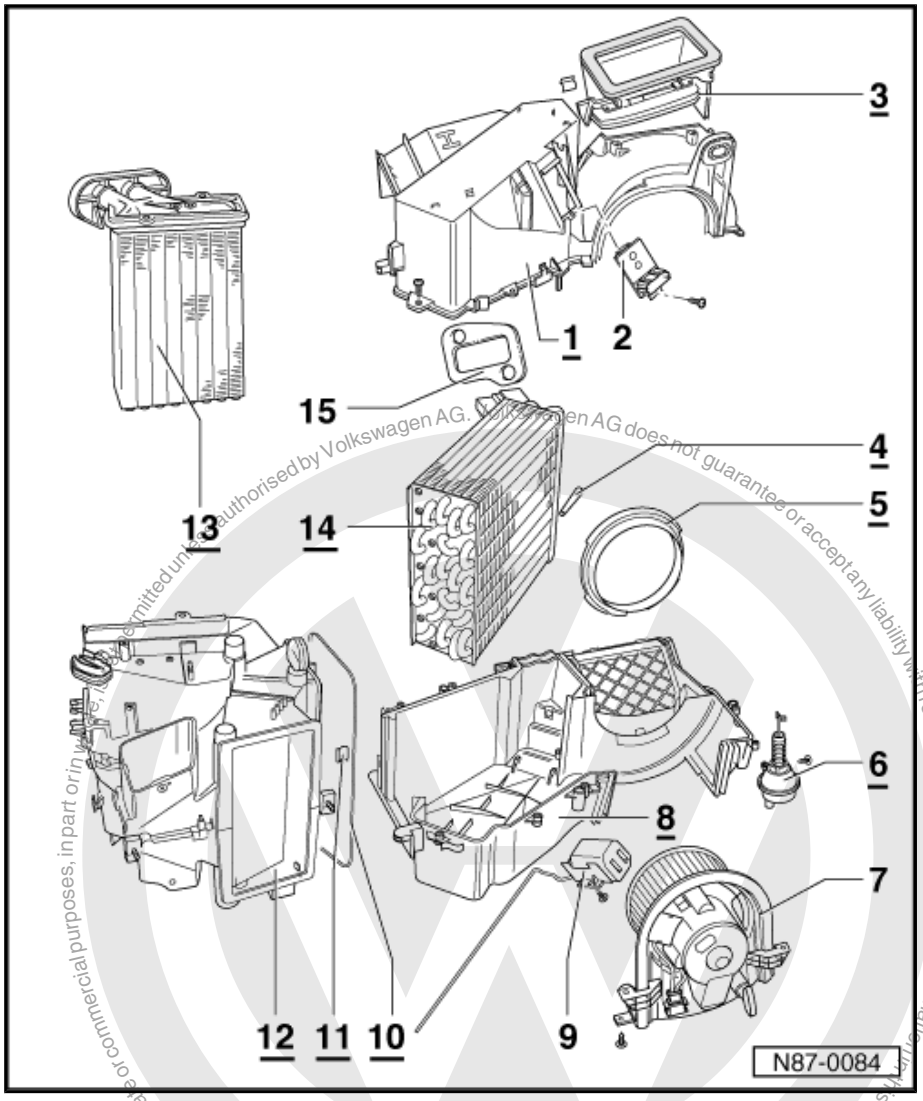

1 - Housing, upper part

- ❑ With fresh air and air recirculation flap.
- ❑ Before assembling, coat fitted surfaces with silicone adhesive sealant -D 176 001 A3- .

2 - Fresh air blower series resistor with overheating fuse -N24-

3 - Intake housing

- ❑ With recirculating air flap.
- ❑ Before assembling, coat fitted surfaces with silicone adhesive sealant -D 176 001 A3- .

4 - Funnel

- ❑ To guide sensor tube of evaporator temperature switch -E33- .

5 - Intake ring

6 - Vacuum unit for fresh air and air recirculation flap

- ❑ Ventilated: fresh air operation.
- ❑ Vacuum hose connection diagram ⇒ page 63 .

7 - Fresh air blower -V2-

8 - Housing, lower part

- ❑ Before assembling, coat fitted surfaces with silicone adhesive sealant -D 176 001 A3- .

9 - Temperature switch for evaporator -E33-

- ❑ Insertion depth of sensor tube: 330 mm.
- ❑ Task: prevents icing up.
- ❑ Switching temperature: opens at or below -2° C.

10 - Sealing cord

- ❑ Watertight.

11 - Clip

12 - Air distribution housing

- ❑ Flaps cannot be renewed.

13 - Heat exchanger

- ❑ After removal, completely renew coolant.

14 - Evaporator

- ❑ With funnel to guide sensor tube of evaporator temperature switch -E33- .

15 - Seal

- ❑ Watertight.

Protected by copyright. Copying for private or commercial purposes, in part or in whole, is not permitted unless authorised by Volkswagen AG. Volkswagen AG does not guarantee or accept any liability with respect to the correctness of information in this document. Copyright by Volkswagen AG.
satelettronica

7 Repair work on refrigerant circuit which may be performed only in appropriate workshops by specially trained mechanics for vehicles ▸ 10.99

7.1 Tools

7.1.1 Required special tools, facilities, testing and measuring instruments and auxiliary items

Notes on repair work to vehicles with air conditioning and on handling refrigerant can be found in ELSA under repair group ⇒ Rep. Gr. 00 Technical information "Air conditioning system - with refrigerant R134a VW".

Notes on tools for repair work to vehicles with air conditioning can be found in ELSA under repair group ⇒ Rep. Gr. 00 Technical information "Air conditioning system - with refrigerant R134a VW".

The version in ELSA under the Internet button is no longer valid.

7.2 Renewing refrigerant circuit components

Note

- *The refrigerant must be extracted beforehand, e.g. with the air conditioning service station -VAS 6007A- .*
- *The previously used service stations can still be used ⇒ Volkswagen Workshop Equipment catalogue.*
- *Safety measures when working on an evacuated refrigerant circuit* *⇒ page 51* *.*
- *Only the components marked with an * can be renewed without opening and evacuating the refrigerant circuit.*
- *To prevent the ingress of moisture, all components of the refrigerant circuit which have been opened must be sealed with suitable plugs.*
- *The colour coding of O-rings for R134a refrigerant circuits has been discontinued. Coloured and black O-rings are used.*
- *Moisten threaded connections of refrigerant circuit with polyethylene glycol (PEG) VW part number 294440 before installation.*
- *Under certain conditions, it is no longer necessary to renew the receiver each time the refrigerant circuit is opened ⇒ Rep. Gr. 00 Technical information "Air conditioning systems - with refrigerant R134a VW" Renewing parts.*

Protected by Copyright. Copyright Volkswagen AG, Volkswagen Aktiengesellschaft, Wolfsburg, Germany. Copyright Volkswagen AG. Volkswagen AG does not guarantee or accept any liability with respect to the correctness of information in this document. Copying for private or commercial purposes, in part or in whole, is not permitted unless authorised by Volkswagen AG. Volkswagen AG
satelettronica

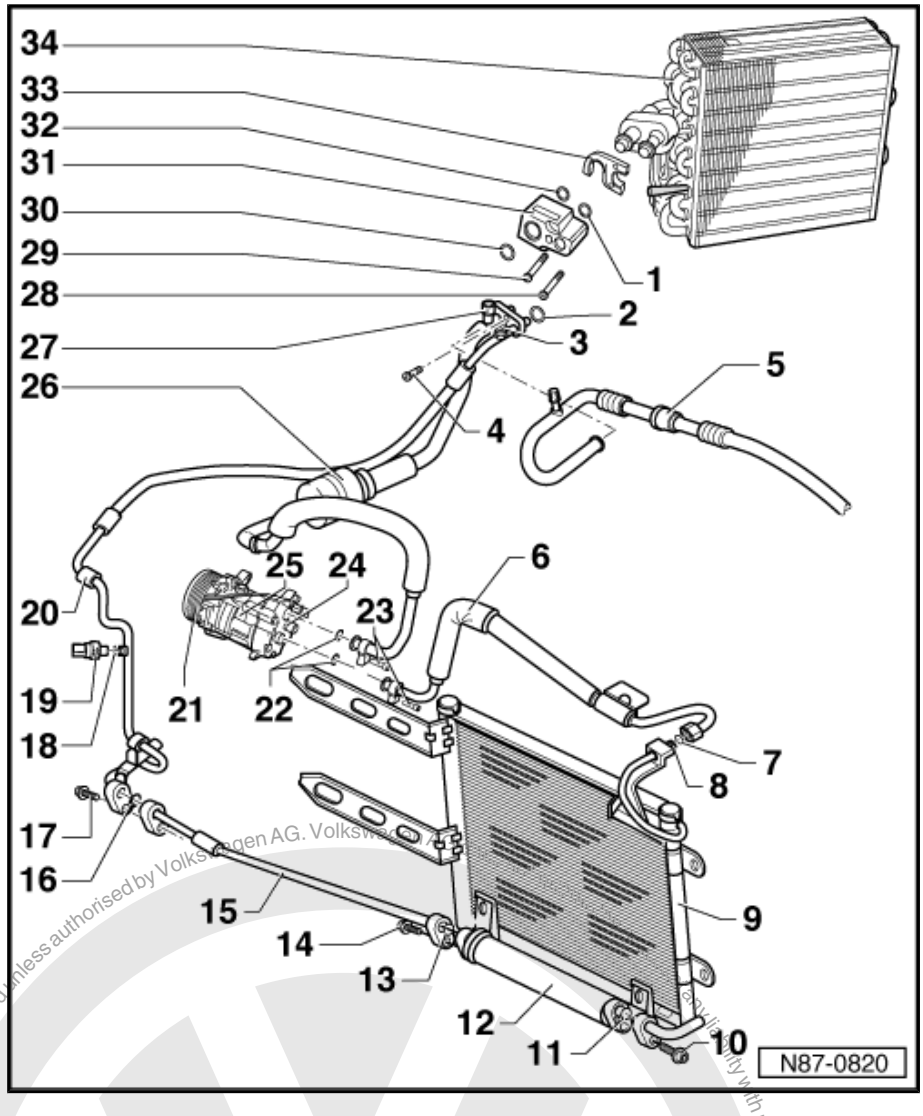

1 - O-ring
- ❑ 10.8 mm; 1.82 mm.

2 - O-ring
- ❑ 8.2 mm; 1.82 mm.

3 - Extraction and charging valve
- ❑ High pressure side.
- ❑ Releasing refrigerant into the environment is a punishable offence.
- ❑ Removing and installing ⇒ page 128 .
- ❑ Capacities ⇒ page 145 .

4 - Socket head combi-bolt
- ❑ 7 Nm.

5 - Quick release coupling
- ❑ Removing and installing ⇒ page 129 .
- ❑ Not present with all types of engines.

6 - Refrigerant hose
- ❑ From air conditioner compressor to condenser.

7 - O-ring
- ❑ 10.8 mm; 1.82 mm.

8 - 3/4" thread -17 UNF

9 - Condenser
- ❑ Removing ⇒ page 142 .

10 - Socket head combi-bolt
- ❑ 7 Nm.

11 - O-ring
- ❑ 10.8 mm; 1.82 mm.

12 - Receiver with dryer bag
- ❑ Functions ⇒ page 129 .

13 - O-ring
- ❑ 10.8 mm; 1.82 mm.

14 - Socket head combi-bolt
- ❑ 7 Nm.

15 - Refrigerant line

16 - O-ring
- ❑ 10.8 mm; 1.82 mm.

17 - Socket head combi-bolt
- ❑ 7 Nm.

18 - O-ring
- ❑ 10.8 mm; 1.82 mm.

Protected by copyright. Copying for private or commercial purposes, in part or in whole, is not permitted unless authorised by Volkswagen AG. Volkswagen AG does not guarantee or accept any liability with respect to the correctness of information in this document. Copyright by Volkswagen AG.
satelettronica

19 - High pressure sender -G65- *

- ❑ Check high pressure sender -G65- ⇒ page 132 .
- ❑ Removing ⇒ page 75 .

20 - Refrigerant line

21 - Air conditioning system magnetic coupling -N25-

22 - O-ring

- ❑ 20.5 mm; 1.8 mm.
- ❑ Qty. 2

23 - Socket head combi-bolt

24 - High-pressure safety valve

- ❑ Checking ⇒ page 75 .

25 - Air conditioner compressor

- ❑ Manufacturer: Sanden, designation: SD6-V12.

26 - Damper

27 - Extraction and charging valve

- ❑ Low pressure side.
- ❑ Releasing refrigerant into the environment is a punishable offence.
- ❑ Removing and installing ⇒ page 127 .
- ❑ Capacities ⇒ page 145 .

28 - Bolt

- ❑ 8 Nm.

29 - Bolt

- ❑ 8 Nm.

30 - O-ring

- ❑ 17 mm; 1.85 mm.

31 - Expansion valve

- ❑ In engine compartment, right.
- ❑ Function and removal ⇒ page 139 .

32 - O-ring

- ❑ 14 mm; 1.82 mm.

33 - Threaded plate

34 - Evaporator

- ❑ In passenger compartment.
- ❑ Removal ⇒ page 138 , Dismantling and assembling evaporator housing.

7.3 Removing extraction and charging valve, low pressure side

WARNING

Danger of freezing injuries.

If refrigerant circuit has not been evacuated, refrigerant may escape.

Extract refrigerant before opening refrigerant circuit.

satelettronica
Reproduction for private or commercial purposes, in part or in whole, is not permitted unless authorised by Volkswagen AG. Volkswagen AG does not guarantee or accept any liability with respect to the correctness of information in this document. Copyright by Volkswagen AG.

– Extract refrigerant from refrigerant circuit, e.g. with air conditioning service station -VAS 6007A- before replacing valve -3-.

For additional service stations ⇒ V.A.G Workshop Equipment Catalogue.

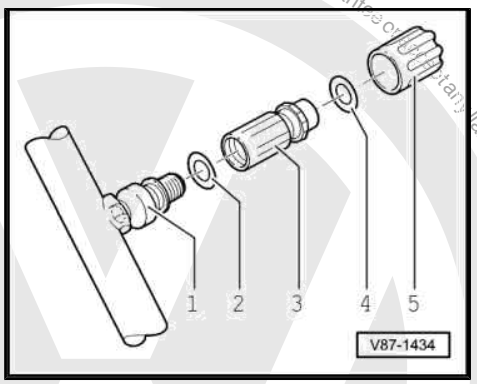

Note

- *Releasing refrigerant into the environment is a punishable offence.*
- *All components of the refrigerant circuit which have been opened must be sealed with suitable plugs to prevent moisture penetration.*

1 - Connection with external thread and groove for O-ring

2 - O-ring; 7.6 mm; 1.8 mm

3 - Extraction and charging valve

4 - O-ring

5 - Cap

7.4 Removing extraction and charging valve, high pressure side

WARNING

Danger of freezing injuries.

If refrigerant circuit has not been evacuated, refrigerant may escape.

Extract refrigerant before opening refrigerant circuit.

– Extract refrigerant from refrigerant circuit, e.g. with air conditioning service station -VAS 6007A- before replacing valve -3-.

For additional service stations ⇒ V.A.G Workshop Equipment Catalogue.

Note

- *Releasing refrigerant into the environment is a punishable offence.*
- *All components of the refrigerant circuit which have been opened must be sealed with suitable plugs to prevent moisture penetration.*

1 - Connection with internal thread

2 - O-ring; 10.8 mm; 1.8 mm

3 - Extraction and filling valve with groove and internal thread for cap

4 - O-ring

5 - Cap

Protected by copyright. Copying for private or commercial purposes, in part or in whole, is not permitted unless authorised by Volkswagen AG. Volkswagen AG does not guarantee or assume any liability with respect to the correctness of information in this document. Copyright by Volkswagen AG.
satelettronica

7.5 Tasks of receiver with dryer bag

The receiver collects the liquid droplets and directs them in a continuous stream to the expansion valve. Moisture which has entered the refrigerant circuit during assembly is collected by the dryer bag in the receiver.

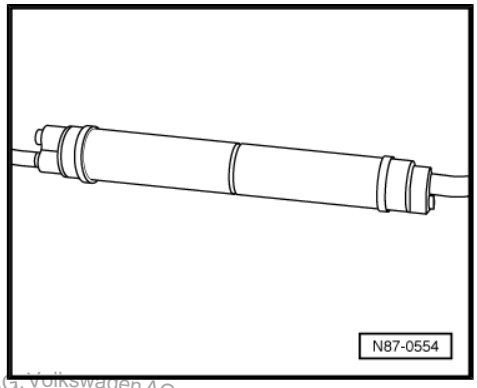

7.6 Quick release coupling

Special tools and workshop equipment required

- Air conditioning service station -VAS 6007A-

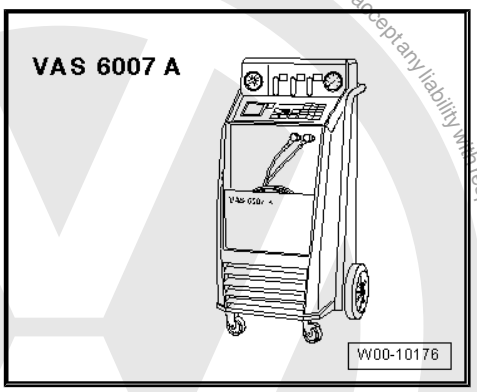

Not illustrated:

- Release tool -VAS 6127/3-
- Protective goggles
- Protective gloves
- Repair set -6Q0 298 260 A-
- – Repair set 6Q0 298 260 A

7.6.1 Disconnecting quick release coupling

Note

After every removal, the O-ring, retainer and retaining ring must be renewed.

– Extract refrigerant, e.g. with air conditioning service station -VAS 6007A- .

WARNING

Danger of freezing injuries.

If refrigerant circuit has not been evacuated, refrigerant may escape.

Extract refrigerant before opening refrigerant circuit.

Protected by copyright. Copying for private or commercial purposes, in part or in whole, is not permitted unless authorised by Volkswagen AG. Volkswagen AG does not guarantee or accept any liability with respect to the correctness of information in this document. Copyright by Volkswagen AG.
satelettronica

– Slide dust seal -1- away from coupling onto refrigerant line -2- until assembly area around coupling is free.

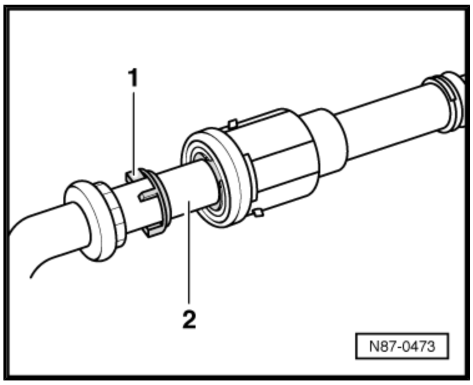

– Fit release tool -VAS 6127/3- -2- near coupling. Notches in release tool -VAS 6127/3- must be in line with indicators.

– Slide release tool -VAS 6127/3- -2- in direction of arrow -A- along air conditioner compressor line -1- to stop on coupling housing -3-.

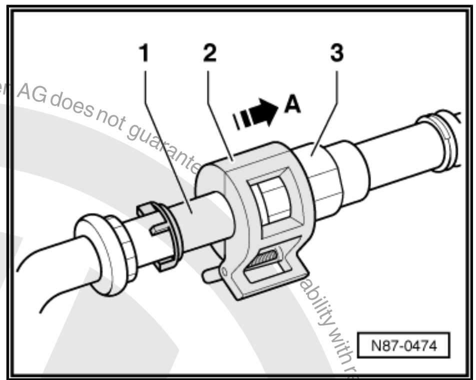

– Hold release tool -VAS 6127/3- against stop and pull coupling housing -1- in -direction of arrow-.

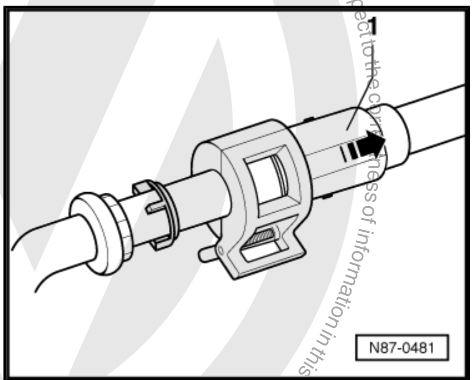

7.6.2 Dismantling quick release coupling

– Remove release tool -VAS 6127/3- . Then remove circlip -1- using circlip pliers.

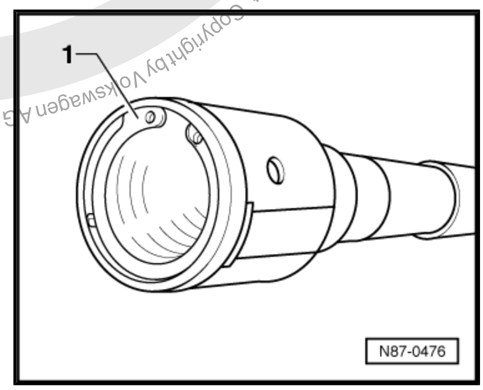

Protected by copyright. Copying for private or commercial purposes, in part or in whole, is not permitted unless authorised by Volkswagen AG. Volkswagen AG does not guarantee or accept any liability with respect to the correctness of information in this document. Copyright by Volkswagen AG.

satelettronica

– Remove locking insert -1- and O-ring -2- from coupling housing -3-.

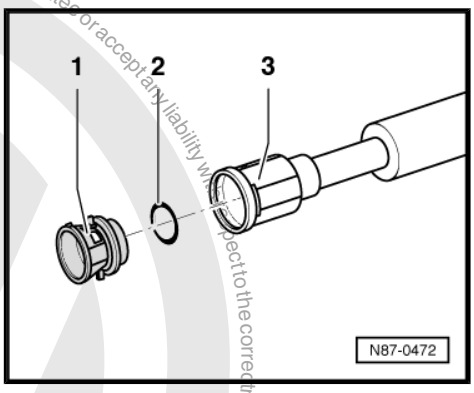

7.6.3 Assembling quick release coupling

– Moisten O-ring -1- with refrigerant oil before assembly and guide O-ring into coupling housing -2- to stop.

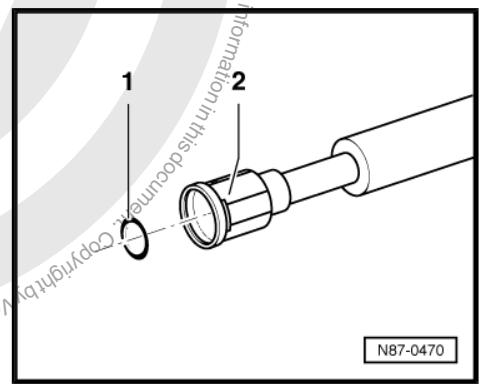

– Guide locking insert -1- into coupling housing -2-. The indicators -A- must be positioned so that they are in line with the holes -B- in the coupling housing.

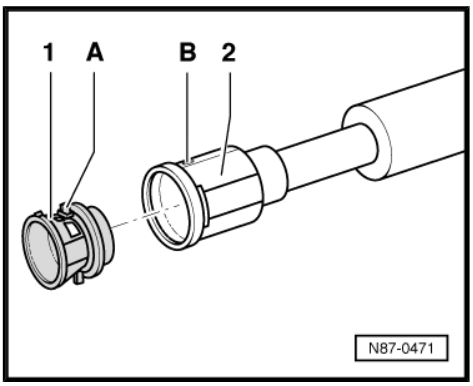

– Install circlip -1- using circlip pliers.

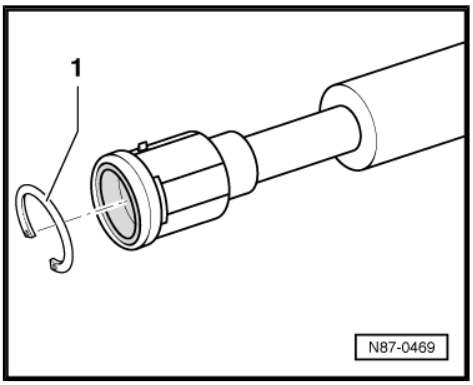

Protected by copyright. Copying for private or commercial purposes, in part or in whole, is not permitted unless authorised by Volkswagen AG. Volkswagen AG does not guarantee or accept any liability with respect to the correctness of information in this document. Copyright by Volkswagen AG.

satelettronica

7.6.4 Connecting quick release coupling

– Guide coupling section of air conditioner compressor line -1- into coupling housing -3- of refrigerant line until indicators protrude clearly through holes.

– Slide dust seal -2- onto coupling housing -3- so that dust seal is flush against coupling.

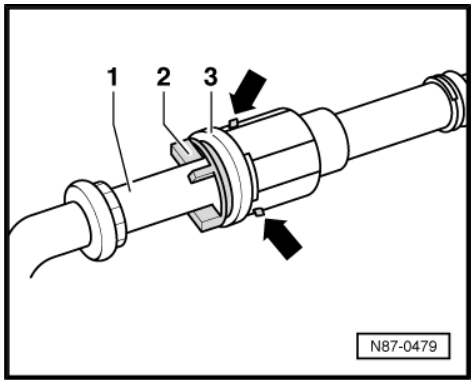

7.7 Checking high pressure sensor -G65-

Special tools and workshop equipment required

- Ignition tester -V.A.G 1767-
- Auxiliary measuring set -V.A.G 1594C-
- Text box -V.A.G 1598A-
- Air conditioning service station -VAS 6007A-

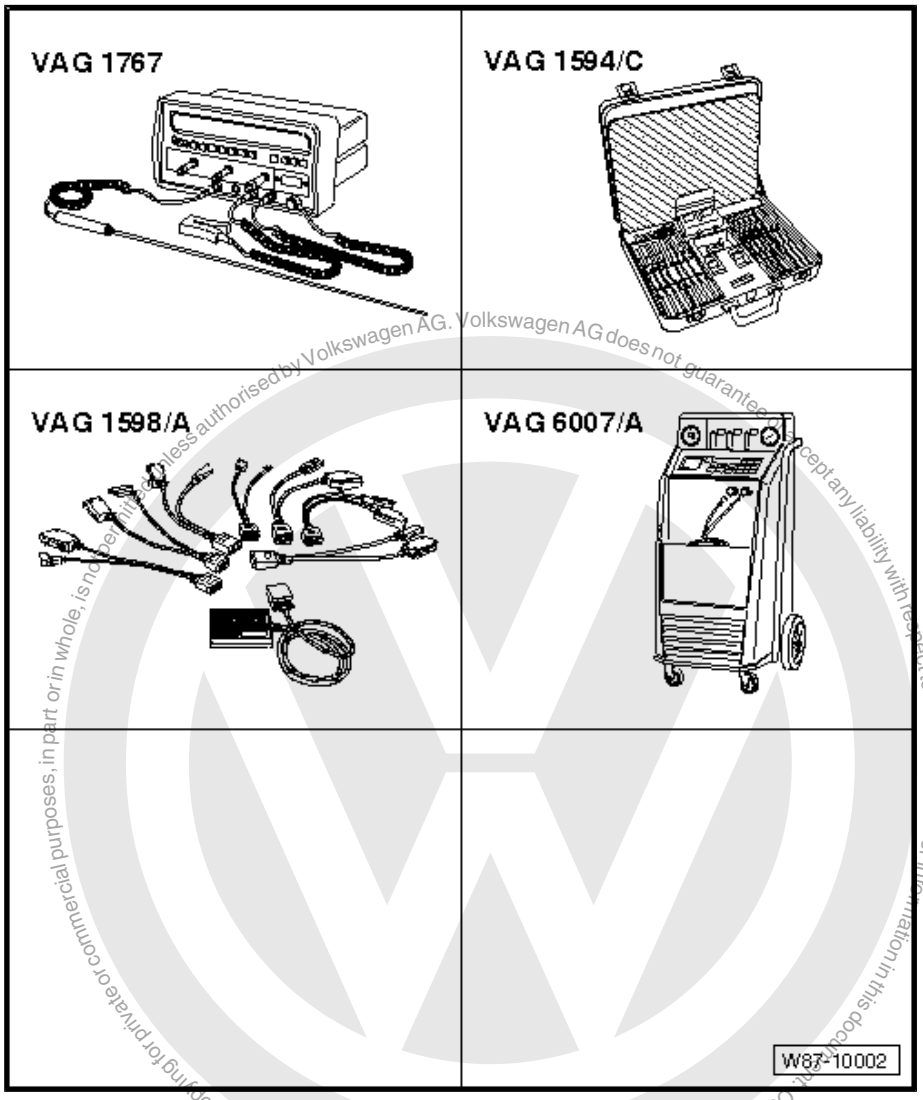

Protected by copyright. Copying for private or commercial purposes, in part or in whole, is not permitted unless authorised by Volkswagen AG. Volkswagen AG does not guarantee or accept any liability with respect to the correctness of information in this document. Copyright by Volkswagen AG.
satelettronica

7.7.1 Testing high pressure sender -G65- via engine control unit

Depending on the signal from the high pressure sender -G65- , the engine control unit does the following via radiator fan control unit -J293- :

- It switches on the air conditioning system magnetic coupling -N25- .
- It switches off the air conditioning system magnetic coupling -N25- .
- It switches radiator fan -V7- to 2nd stage if pressure increases.
- The idling speed is raised if air conditioning is switched on.

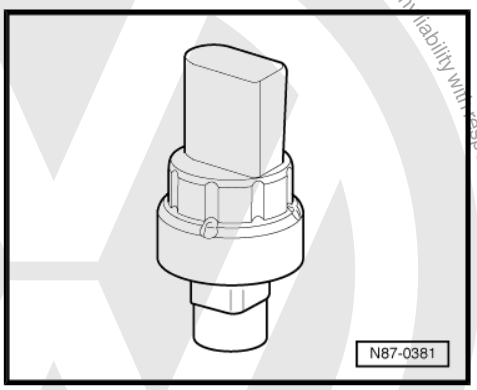

Note

- *The high pressure sender -G65- can be removed without extracting the refrigerant from the refrigerant circuit.*
- *The high pressure sender -G65- supplies information to the engine control unit and the radiator fan control unit.*
- *The high pressure sender -G65- can be checked via engine control unit self-diagnosis.*
- *The high pressure sender -G65- can be tested using the vehicle diagnosis, testing and information system -VAS 5051A- or vehicle information and service information system -VAS 5052- via engine control unit (engine running, air conditioning on) ⇒ Rep. Gr 01; Self-diagnosis; Reading measured value block 08; Display group 057 (value 4 in %). Compare value with table ⇒ page 134 .*

7.7.2 Checking high pressure sender -G65- with ignition tester -V.A.G 1767-

Note

This test is for vehicles on which self-diagnosis via the engine control unit is not possible.

7.7.3 Assembling tools and equipment

– Connect ignition tester -V.A.G 1767- -1-. Connect tester earth -2- (black grip) to vehicle earth -3-. Establish connection with lead from auxiliary measuring set -V.A.G 1594C- from -4- to connector, 14-pin connector -T14/2- , of radiator fan control unit -J293- .

Checking:

– Switch on ignition.

– Press duty cycle button of ignition tester -V.A.G 1767- -arrow-.

– Compare value with table ⇒ page 134 .

Protected by copyright. Copyright by Volkswagen AG. Volkswagen AG does not guarantee or accept any liability with respect to the correctness of information in this document. Copying for private or commercial purposes, in whole or in part, is not permitted unless authorised by Volkswagen AG.
satelettronica

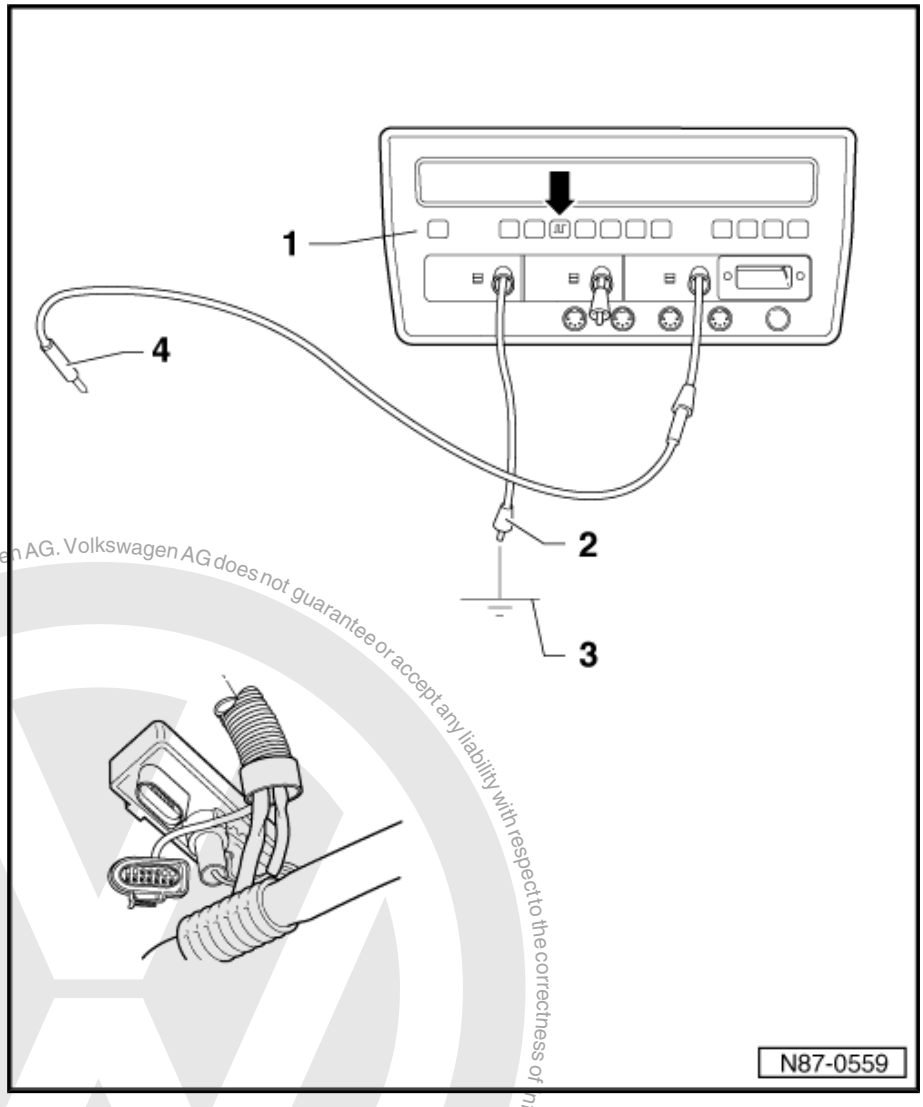

7.7.4 Evaluating test results

A workshop temperature of between 20° C to 30° C is assumed for the evaluation. The engine is at room temperature.

Test result	Possible cause of fault	Rectifying fault
Duty cycle of 20% to 25%	High pressure sender -G65- is OK	
Duty cycle 90%	High pressure sender -G65- defective	– Renew high pressure sender -G65- ⇒ page 93 .
Duty cycle 5%	♦ High pressure sender -G65- defective or ♦ Refrigerant circuit is empty	– Renew high pressure sender -G65- ⇒ page 93 . – Charge with refrigerant.
Duty cycle 0%	Short circuit or open circuit in wiring or connectors	– Check wiring and connections according to current flow diagram.

Protected by copyright. Copying for private or commercial purposes, in part or in whole, is not permitted unless authorised by Volkswagen AG. Volkswagen AG does not guarantee or accept any liability with respect to the correctness of information in this document. Copyright by Volkswagen AG.
satelettronica

Note

If the cause of the customer complaint has not been found, check fault memory of engine electronics control unit.

7.7.5 Measurements for evaluating air conditioning system

Prerequisite:

- Radiator fan thermal switch -F18- is OK ⇒ Rep. Gr. 19

Checking:

The following measurements are performed with high pressure sender -G65- installed.

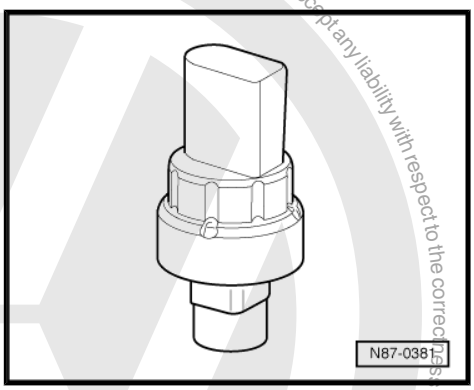

Note

If the high pressure sender -G65- is removed or the connector pulled off the high pressure sender -G65- , the air conditioner compressor will not switch on.

To assess the air conditioner's performance, perform and evaluate the following checks:

– Check the air conditioner's fill level; the air conditioner is switched off if the pressure is too low (for example, loss of refrigerant).

– Check blower switch-on; radiator fan -V7- is switched to the next higher speed when the pressure in the refrigerant circuit rises (excessive pressure).

– Check air conditioner switch-off; the air conditioner is switched off when pressure is excessive (for example when engine cooling is insufficient).

7.8 Removing and installing heater and air conditioner unit

7.8.1 Before beginning repair work, perform the following steps:

– Switch off all electrical consumers.

– Switch off ignition.

– Pull out ignition key.

Special tools and workshop equipment required

Protected by copyright. Copyright by Volkswagen AG. Volkswagen AG does not guarantee or accept any liability with respect to the correctness of information in this document. Copyright by Volkswagen AG.
satelettronica

- Air conditioning service station -VAS 6007A-

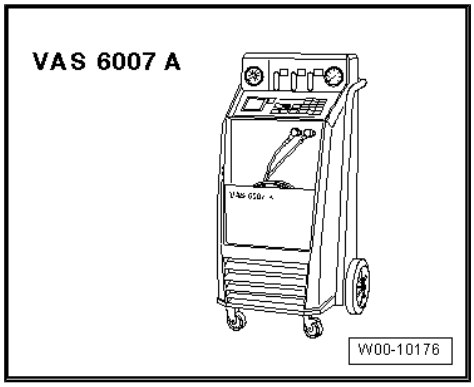

Note

- *The refrigerant must be extracted beforehand, e.g. with the air conditioning service station -VAS 6007A- .*
- *The previously used service stations can still be used ⇒ Volkswagen Workshop Equipment catalogue.*
- *To prevent the ingress of moisture, all components of the refrigerant circuit which have been opened must be sealed with suitable plugs.*

Protected by copyright. Copying for private or commercial purposes, in part or in whole, is not permitted unless authorised by Volkswagen AG. Volkswagen AG does not guarantee or accept any liability with respect to the correctness of information in this document. Copyright by Volkswagen AG.
satelettronica

1 - Hexagon nut
- ❑ Qty. 3
- ❑ 4 Nm.

2 - Bulkhead

3 - Heating and air conditioning
- ❑ Dismantling and assembling evaporator housing ⇒ page 138 .

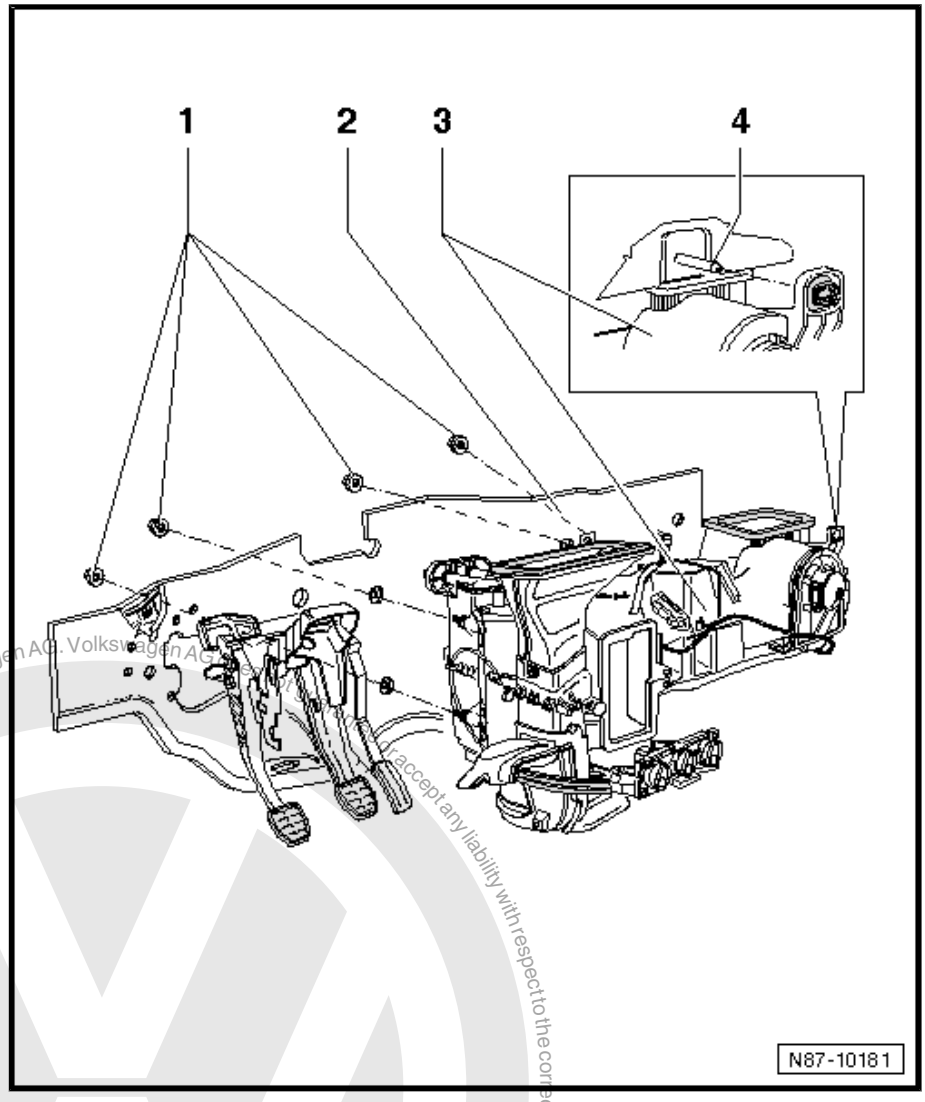

Removing

– Remove dash panel ⇒ Rep. Gr. 70 .

> ⚠ **WARNING**
>
> *Danger of scalding injuries.*
>
> *The cooling system is pressurised. When the engine is warm, the coolant temperature may be above 100° C.*
>
> *If necessary, release pressure before carrying out repairs.*

– Seal coolant hoses in engine compartment and remove from heat exchanger.

– Seal heat exchanger to prevent coolant from escaping.

– Extract refrigerant with air conditioning service station -VAS 6007A- .

> ⚠ **WARNING**
>
> *Danger of freezing injuries.*
>
> *If refrigerant circuit has not been evacuated, refrigerant may escape.*
>
> *Extract refrigerant before opening refrigerant circuit.*

– Disconnect refrigerant lines from expansion valve.

– Remove dust and pollen filter with filter housing ⇒ page 37 .

– Remove hexagon nuts ⇒ Item 1 (page 137) .

Installing

– Guide heater and air conditioner unit to bulkhead and push studs through holes provided.

– At the same time, make sure that heater and air conditioner unit sits on guide pin ⇒ Item 4 (page 138) against stop.

Protected by copyright. Copyright by Volkswagen AG. Volkswagen AG accept any liability with respect to the correctness of information in this document. Copyright by Volkswagen AG. Volkswagen AG authorised by ... not permitted for commercial purposes, in part or in whole, is not permitted without the express consent of Volkswagen AG.
satelettronica

– Screw hexagon nuts onto bulkhead in engine compartment and tighten them.

– Check coolant level and top up.

4 - Guide pin

7.9 Dismantling and assembling evaporator housing

– Remove heater and air conditioner unit ⇒ page 135 .

1 - Heat exchanger/bulkhead seal

2 - Heat exchanger

❑ After removal, completely renew coolant.

3 - Housing, upper part

❑ With fresh air and air recirculation flap.

4 - Seal

❑ Installing seal on evaporator ⇒ page 139 .

5 - Evaporator

❑ Installing seal on evaporator connection ⇒ page 139

6 - Housing, lower part

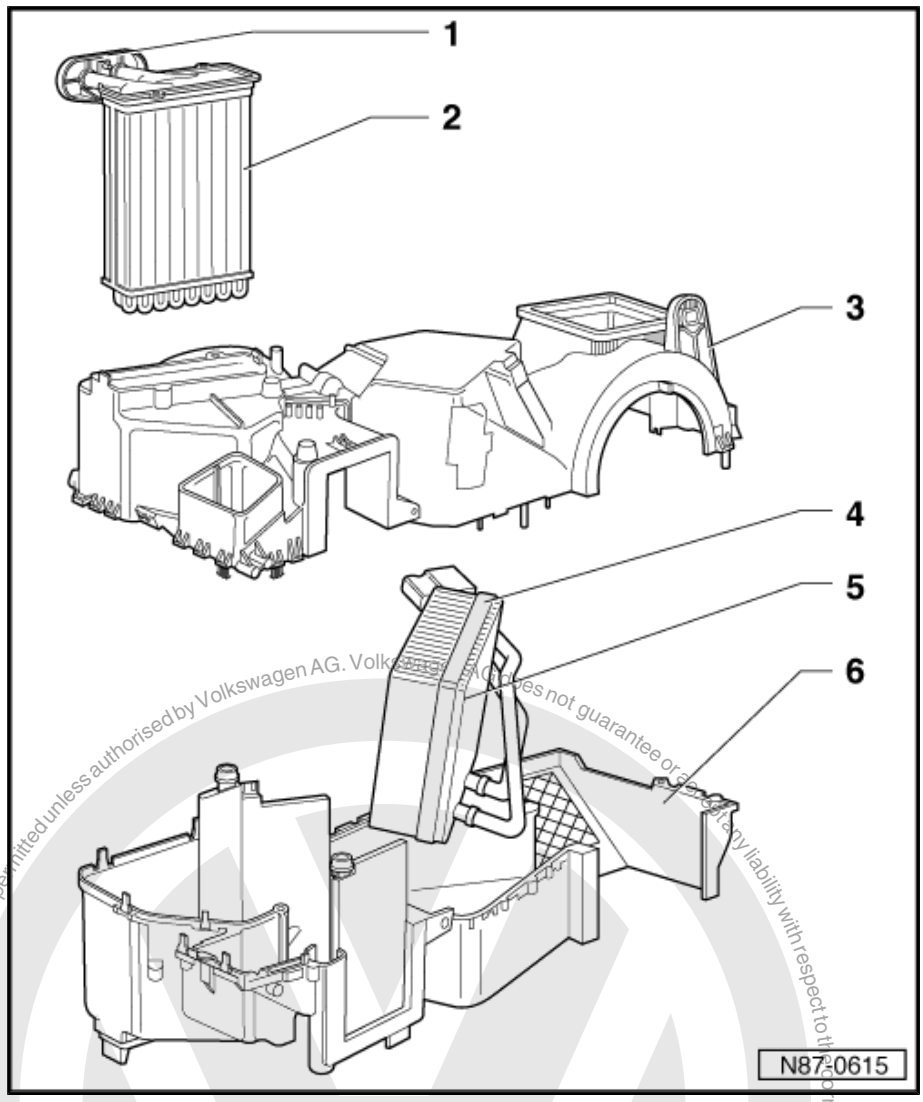

Protected by copyright. Copying for private or commercial purposes, in part or in whole, is not permitted unless authorised by Volkswagen AG. Volkswagen AG does not guarantee or assume any liability with respect to the correctness of information in this document. Copyright by Volkswagen AG.
satelettronica

Protected by copyright. Copying for private or commercial purposes, in part or in whole, is not permitted unless authorised by Volkswagen AG. Volkswagen AG does not guarantee or accept any liability with respect to the correctness of information in this document. Copyright by Volkswagen AG.

7.9.1 Installing seal on evaporator

The evaporator -A- must be sealed against housing along top and sides with gasket -B-.

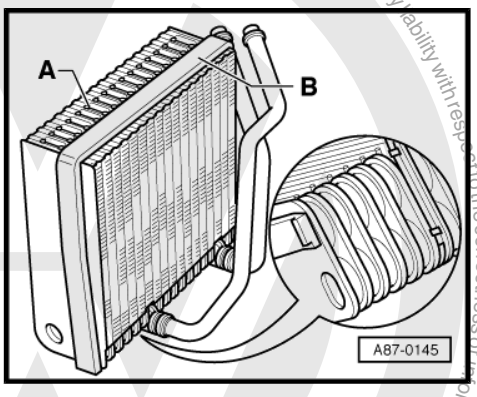

Note

To ensure that condensed water can drain properly, bottom side of evaporator must not be fitted with a gasket.

7.9.2 Installing seal on evaporator connection

The refrigerant lines -C- must be sealed with gasket -A- along both halves of housing -B-.

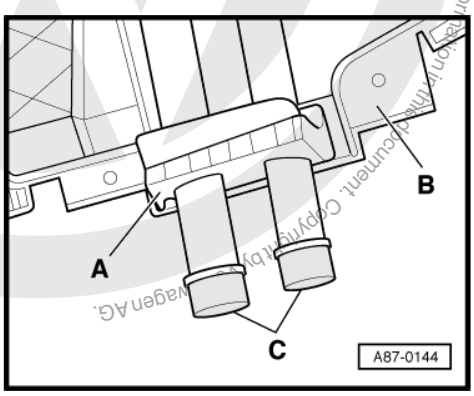

7.10 Expansion valve, function and removal

Note

- *The refrigerant must be extracted beforehand, e.g. with the air conditioning service station -VAS 6007A- .*
- *The previously used service stations can still be used ⇒ Volkswagen Workshop Equipment catalogue.*
- *Only the components marked with an * can be replaced without opening and evacuating circuit.*
- *To prevent the ingress of moisture, all components of the refrigerant circuit which have been opened must be sealed with suitable plugs.*

satelettronica

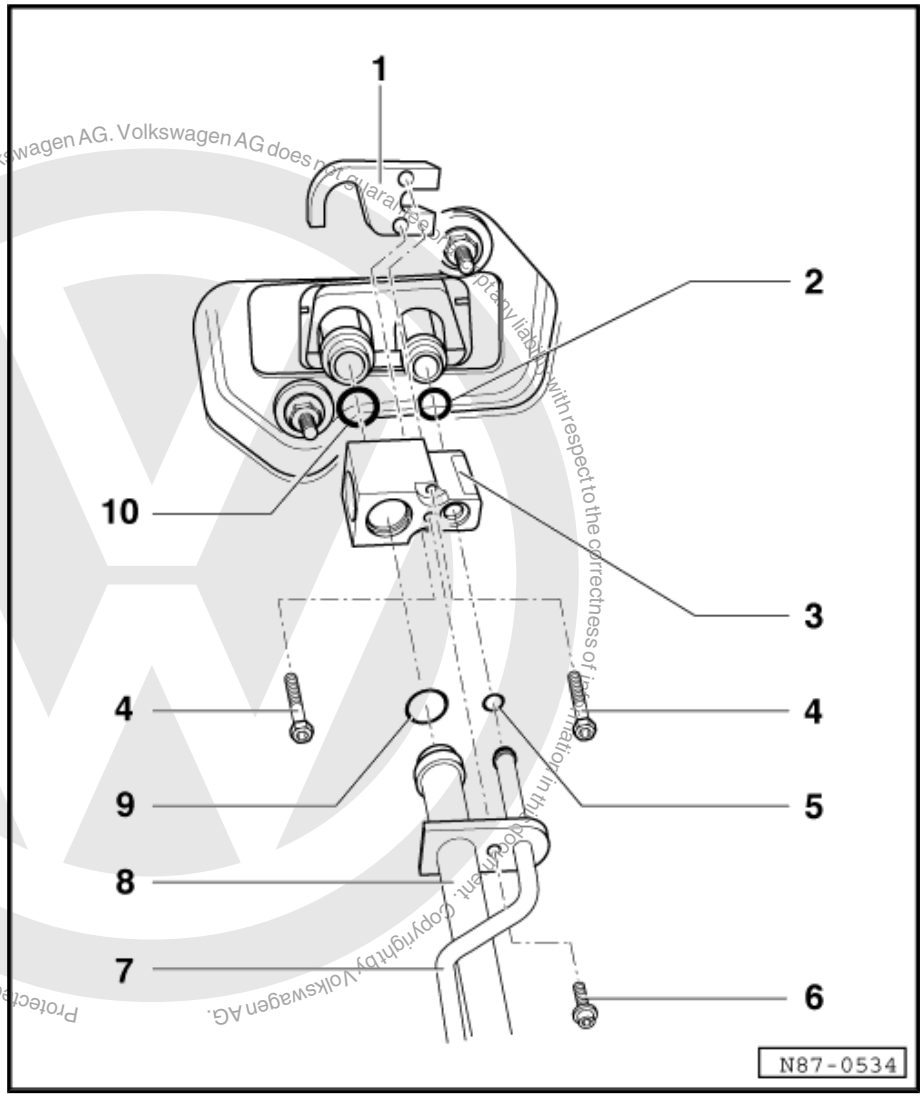

1 - Threaded plate

2 - O-ring
- ❑ 10.8 mm; 1.82 mm.

3 - Expansion valve
- ❑ In engine compartment, right.
- ❑ Aperture must be sealed against splashed water.

Functions:
- ♦ The expansion valve atomises the in streaming refrigerant and regulates the through flow so that the vapour, depending on heat transport, becomes a gas only upon reaching the outlet of the evaporator.

4 - Bolts
- ❑ 8 Nm.
- ❑ Qty. 2

5 - O-ring
- ❑ 7.6 mm; 1.82 mm.

6 - Socket head combi-bolt
- ❑ 7 Nm.

7 - Refrigerant line
- ❑ From receiver with dryer bag to expansion valve.

8 - Refrigerant hose
- ❑ From expansion valve to air conditioner compressor.
- ❑ With damper.

9 - O-ring
- ❑ 17 mm; 1.85 mm.

10 - O-ring
- ❑ 14 mm; 1.82 mm.

7.10.1 Removing

Special tools and workshop equipment required

Protected by copyright. Copying for private or commercial purposes, in part or in whole, is not permitted unless authorised by Volkswagen AG. Volkswagen AG does not guarantee or assume any liability with respect to the correctness of information in this document. Copyright by Volkswagen AG.

satelettronica

♦ Air conditioning service station -VAS 6007A-

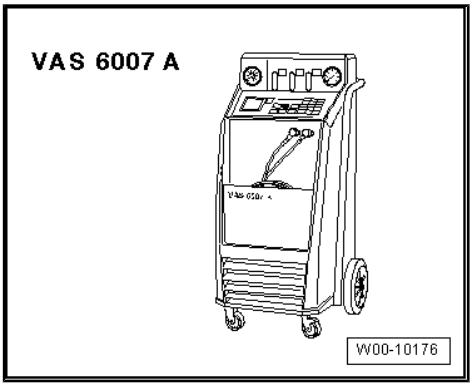

– Extract refrigerant, e.g. with air conditioning service station - VAS 6007A- .

Note

Releasing refrigerant into the environment is a punishable offence.

WARNING

Danger of freezing injuries.

If refrigerant circuit has not been evacuated, refrigerant may escape.

Extract refrigerant before opening refrigerant circuit.

– Remove screw -6-.
– Pull out refrigerant line -7- and refrigerant hose -8-.
– Remove bolts -4-.
– Remove expansion valve -3-.

Protected by copyright. Copying for private or commercial purposes, in part or in whole, is not permitted unless authorised by Volkswagen AG. Volkswagen AG does not guarantee or accept any liability with respect to the correctness of information in this document. Copyright by Volkswagen AG.
satelettronica

Protected by copyright. Copying for private or commercial purposes, in part or in whole, is not permitted unless authorised by Volkswagen AG. Volkswagen AG does not guarantee or accept any liability with respect to the correctness of information in this document. Copyright by Volkswagen AG.

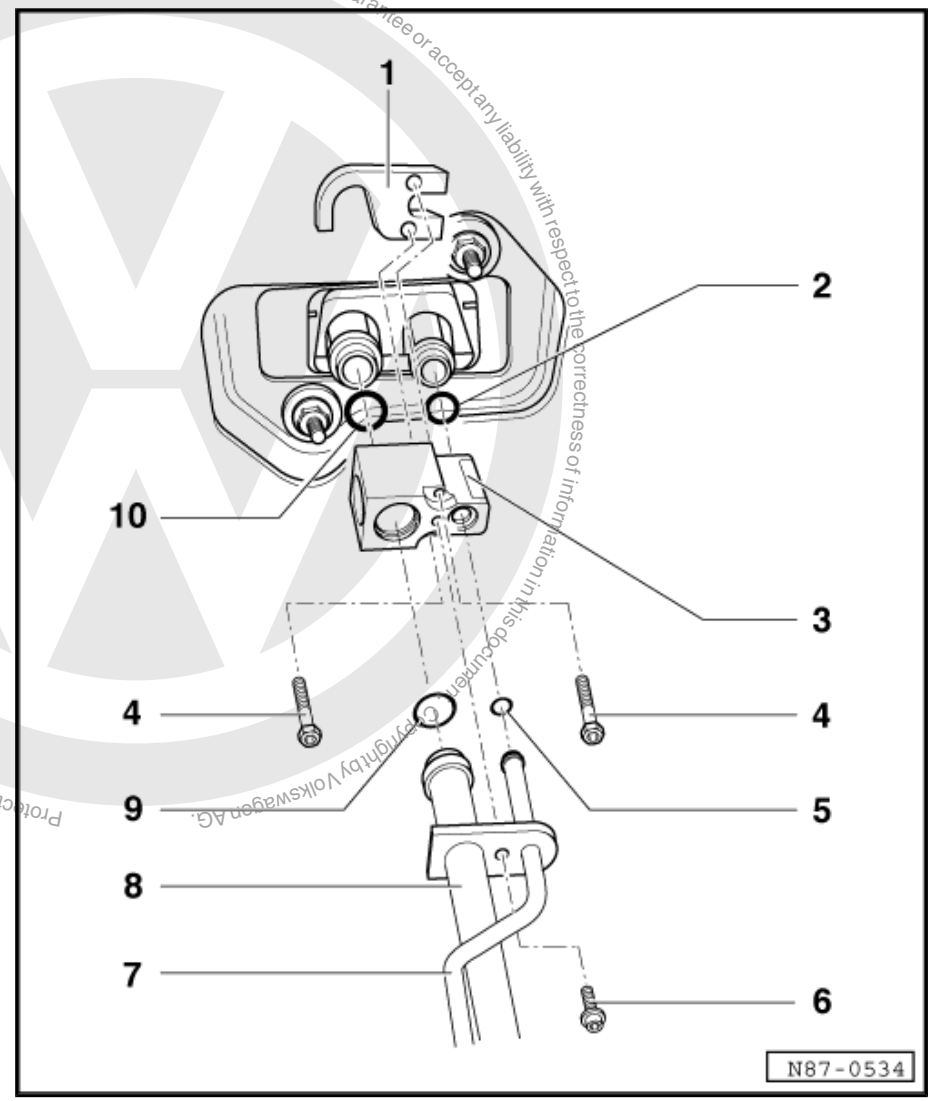

7.11 Removing and installing condenser

7.11.1 Before beginning repair work, perform the following steps:

– Switch off all electrical consumers.
– Switch off ignition.
– Pull out ignition key.

Special tools and workshop equipment required

satelettronica

- Air conditioning service station -VAS 6007A-

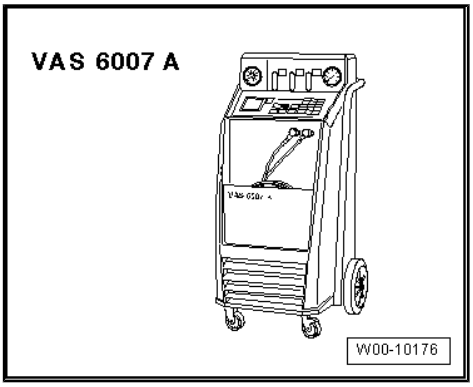

Note

- *The refrigerant must be extracted beforehand, e.g. with the air conditioning service station -VAS 6007A- .*
- *The previously used service stations can still be used ⇒ Volkswagen Workshop Equipment catalogue.*
- *To prevent the ingress of moisture, all components of the refrigerant circuit which have been opened must be sealed with suitable plugs.*

Protected by copyright. Copying for private or commercial purposes, in part or in whole, is not permitted unless authorised by Volkswagen AG. Volkswagen AG does not guarantee or accept any liability with respect to the correctness of information in this document. Copyright by Volkswagen AG.

satelettronica

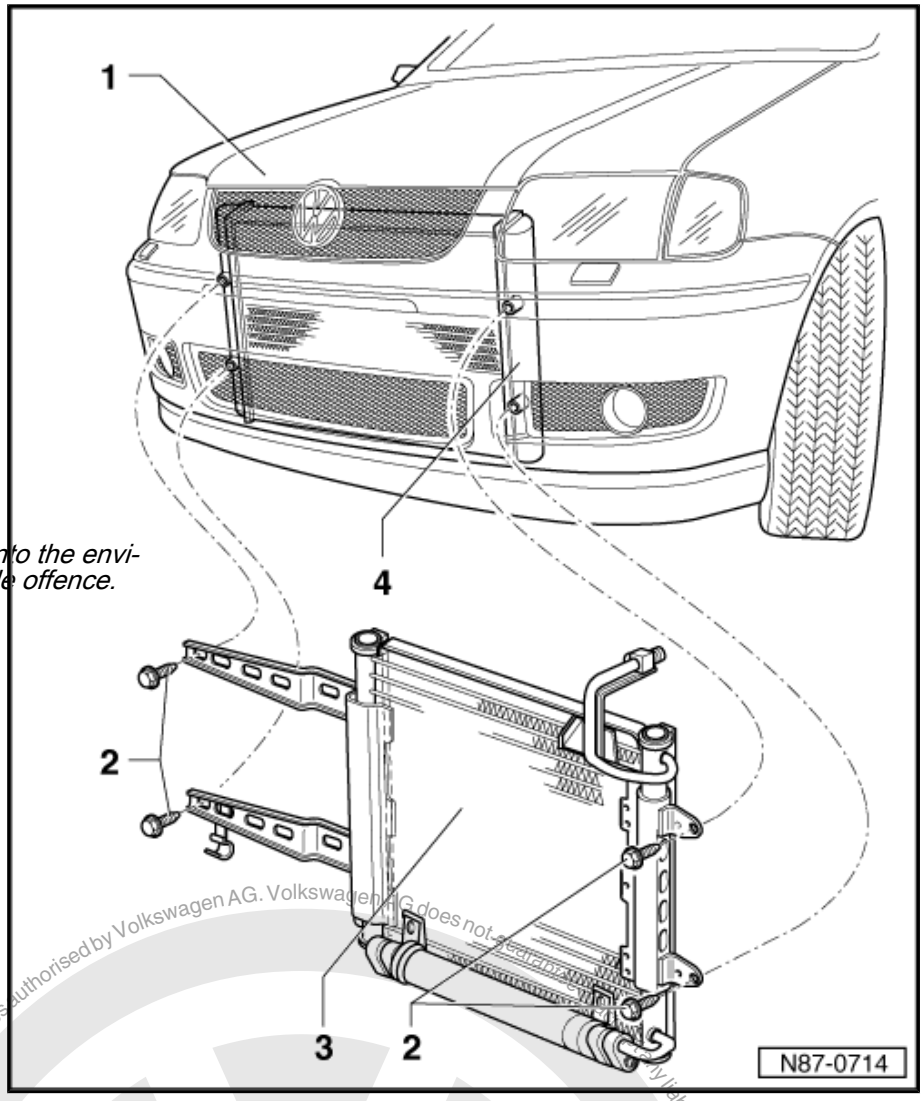

1 - Lock carrier

- ❑ Removing ⇒ Rep. Gr. 50 .

2 - Bolts

- ❑ 8 Nm.
- ❑ Qty. 4

3 - Condenser

Removing:

– Extract refrigerant, e.g. with air conditioning service station -VAS 6007A- .

Note

Releasing refrigerant into the environment is a punishable offence.

– Remove lock carrier ⇒ Rep. Gr. 50 .

WARNING

Danger of freezing injuries.

If refrigerant circuit has not been evacuated, refrigerant may escape.

Extract refrigerant before opening refrigerant circuit.

– Remove refrigerant lines on condenser and seal.

– Separate receiver with dryer bag from condenser and seal lines.

– Remove bolts ⇒ Item 2 (page 144) .

4 - Radiator

Protected by copyright. Copying for private or commercial purposes, in part or whole, is not permitted unless authorised by Volkswagen AG. Volkswagen AG does not guarantee or accept any liability with respect to the correctness of information in this document. Copyright by Volkswagen AG.
satelettronica

8 Capacities

8.1 Refrigerant R134a

Air conditioner compressor	Manufacturer	Capacity
SD7 B10	Sanden, ‣ 09.99	700+50 g
SD6 V12	Sanden, 10.99 ‣	550+25 grammes

8.2 Refrigerant oil

The special refrigerant oil (for use with refrigerant circuits R134a only) can no longer be obtained on the refrigerant/machine oil market.

Refrigerant oil can be obtained using following part No. for	
SD7 B10 air conditioner compressor; Sanden	G 052 100 A2
SD6 V12 air conditioner compressor; Sanden	G 052 154 A2

Type	Production period	Capacity[16)]
6N0 820 803 A	‣ 09.99	100 ± 15 cm^3
6N0 820 803 B	10.99 ‣	120 ± 15 cm^3

16) This quantity of refrigerant oil is contained in a replacement compressor and equals the capacity.

Important information:

Because refrigerant oil is very hygroscopic, opened containers must be closed immediately after use to stop ingress of moisture.

Because of its chemical properties, refrigerant oil must not be disposed of together with engine or gear oil.

8.2.1 Oil distribution

The oil, which is located in the sump of the air conditioner compressor before the air conditioner system is switched on for the first time, distributes itself through the refrigerant circuit as follows:

- Compressor approx. 50%
- Condenser approx. 10%
- Suction hose approx. 10%
- Evaporator approx. 20%
- Receiver approx. 10%

Protected by copyright. Copying for private or commercial purposes, in whole or in part, is not permitted unless authorised by Volkswagen AG. Volkswagen AG does not guarantee or accept any liability with respect to the correctness of information in this document. Copyright by Volkswagen AG.
satelettronica